Vincotech

POWER MODULES

/ 2016-17

At Vincotech, we optimize our power modules to craft the perfect solution for your requirements. Our success hinges on knowing who you are, where you're coming from, and what you're aiming for. Count on us, as a reliable partner, to put your needs first.

EMPOWERING **YOUR IDEAS**

EMPOWERING **YOUR IDEAS**

Vincotech, an independent company within the Mitsubishi Electric Corporation, is a market leader and your reliable partner in power modules.

Established and dependable, Vincotech is the partner of choice when it comes to designing and building power modules for motion control, renewable energy, and power supply applications, setting performance standards for both off-the-shelf and application-specific solutions.

An independently operating affiliate of Mitsubishi Electric Corporation staffed with around 500 people worldwide, Vincotech delivers fast, flexible and customer-focused solutions, service and support to empower customers' ideas.

Headquartered in Unterhaching near Munich, Germany, Vincotech also owns and operates a production site in Bicske, Hungary. This ISO / TS16949- and ISO14001-certified factory develops and manufactures all power modules.

Engineered to comply with the RoHS and REACH standards, these modules are subjected to a battery of electrical and functional tests prior to packaging to ensure they fully satisfy Vincotech's rigorous standards for quality.

The name Vincotech stands for highest product reliability, excellent customer service, and flexible, competitive solutions, all of which culminate in outstanding customer satisfaction.

A highly motivated and experienced engineering team at the R&D facility, supported by skilled technical service crews in all major regions, provides the underpinning for the company's strong technology portfolio.

Vincotech, your reliable partner of choice.

Vincotech lives by the principle of reliable partnership.

To this end, we communicate efficiently and dependably. We trust in our employees' capabilities. We are open, honest, reliable and as good as our word – or better.

We mean what we say and do what we say we're going to do. We put the customer's success first. And that is why customers and Vincotech are equal partners.

CONTENT

ADVANCED TECHNOLOGY

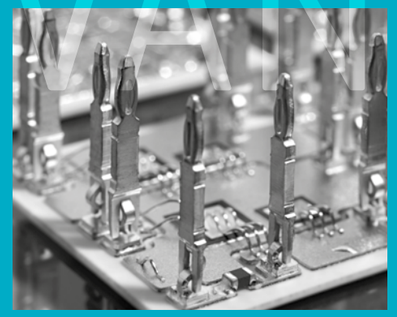

Direct Pressed DCB (Baseplate-less Modules)

Modules without baseplates are ready for assembly and can be pressed directly to the heat sink. A reliable and cost-effective solution for applications where thermal capacity is not an issue. These modules are the perfect substitute for solid copper or aluminum silicon carbide baseplates.

Description:
/ Single DCB substrate
/ W/o baseplate
/ Modules to be pressed directly to the application heat sink
/ Variable pins
Solder pins / Press-fit pins

Thick Film Based IPM Platform

Thick film serves to produce highly integrated power modules in an additive process where various layers of conduction and insulation materials are printed on a ceramic sheet. The layers can form tracks, pads, or resistors. This technology offers good thermal conductivity, the option of creating layouts similar to a PCB, and freedom in designing housings and pins.

Thick film is a mature technology, having seen several years of use, particularly in critical automotive and other applications.

Description:
/ Single substrate TF Al_2O_3
/ Printed AgPd connection tracks
/ Printed, laser-trimmed resistive tracks
/ Bare die / SMD component mix
/ Variable pins
Solder pins / Press-fit pins

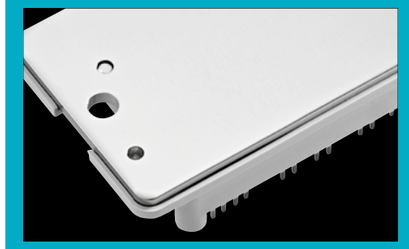

DCB Substrate on Cu-Baseplate

Power modules with baseplates are more robust, extend systems' life and enlarge the active area for heat to flow from the module to the heat sink.

A module with a baseplate can dissipate up to 48 % more power. This results in more available inverter power or in reduced junction temperatures. Modules also last longer with the benefit of baseplates' superior thermal dissipation.

Description:
/ Multiple DCB substrates on Cu baseplate
/ Baseplate screwed to the heat sink
/ Variable pins
Solder pins / Press-fit pins

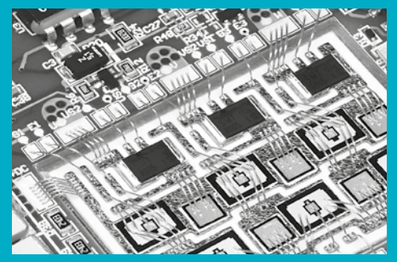

DCB Substrate on Cu-Baseplate Based IPM Platform

IPM platforms with a baseplate can accommodate various topologies as well as a gate drive circuit, SMPS, voltage and current sensors, and many other components. A typical six-pack topology is the most frequently used option. The power semiconductors are bonded directly to a standard PCB that holds the discrete components.

Description:
/ Multiple substrates on Cu baseplate
/ Baseplate screwed to the heat sink
/ Variable interconnect technology
/ PCB-DBC wire interconnection

DCB Substrate on Cu-Baseplate with Screw Contacts

Vincotech high-power modules come in a low inductive package for high-power applications. Optimized for three-level topologies, these modules allow for high switching frequencies and fully symmetrical layouts.

Description:
/ One or several Cu baseplates
/ Baseplate(s) screwed to heat sink
/ Press-fit or solder pins for signal leads
/ Cu screw contact with nuts for power leads

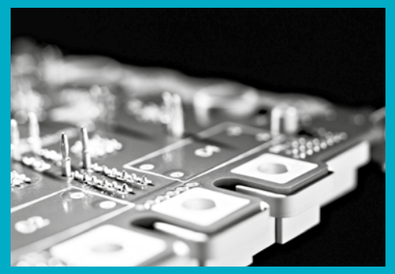

Direct Pressed DCB (Baseplate-less Modules with Spring Contact)

Direct Pressed in modules can be mounted in a single step to the heat sink and driver board. These modules are affixed with SPRiNG contacts and just a single screw to create electrical and thermal connections and make assembly an exercise in convenience. There is no need for time-consuming, costly mounting procedures, and even entire modules are easy to replace with SPRiNG contacts should the need arise.

Description:
/ Single DCB substrate
/ W/o baseplate
/ Cross module assembly
/ Variable press on contacts

SUPERIOR SUBSTRATE MATERIAL
High-performance Si_3N_4

Remarkable mechanical strength, superior toughness, and high thermal conductivity make silicon nitride substrates the material of choice for power modules designed for ultra reliable products.

Si_3N_4 Ceramic

/ High thermal conductivity (four times that of Al_2O_3)
/ 50 % lower R_{th} for MiniSKiiP® (incl. thermal interface material)
/ Physically robust enough for high-performance thermal interface material (phase-change with 3.4 W/mK) to be used to expedite module assembly and handling
/ Lower thermal expansion rates for improved load power cycling capability

SUPERIOR SUBSTRATE MATERIAL
AlN – Aluminium Nitride

With the benefit of its high thermal conductivity, AlN can serve to increase power modules' current carrying capability while maintaining robust insulating capacity. Vincotech's advanced power module design accommodates AlN substrates without requiring architectural modifications. This design uses pressure-contact technology to establish a thermal connection between the module and heat sink.

The life span of a power module with an AlN substrate is more than twice that of an Al_2O_3 version.

Key Attributes of Aluminium Nitride

/ Beneficial dielectric properties
/ High thermal conductivity
/ Low thermal expansion coefficient, close to that of Silicon
/ Non-reactive to normal semiconductor process chemicals and gases

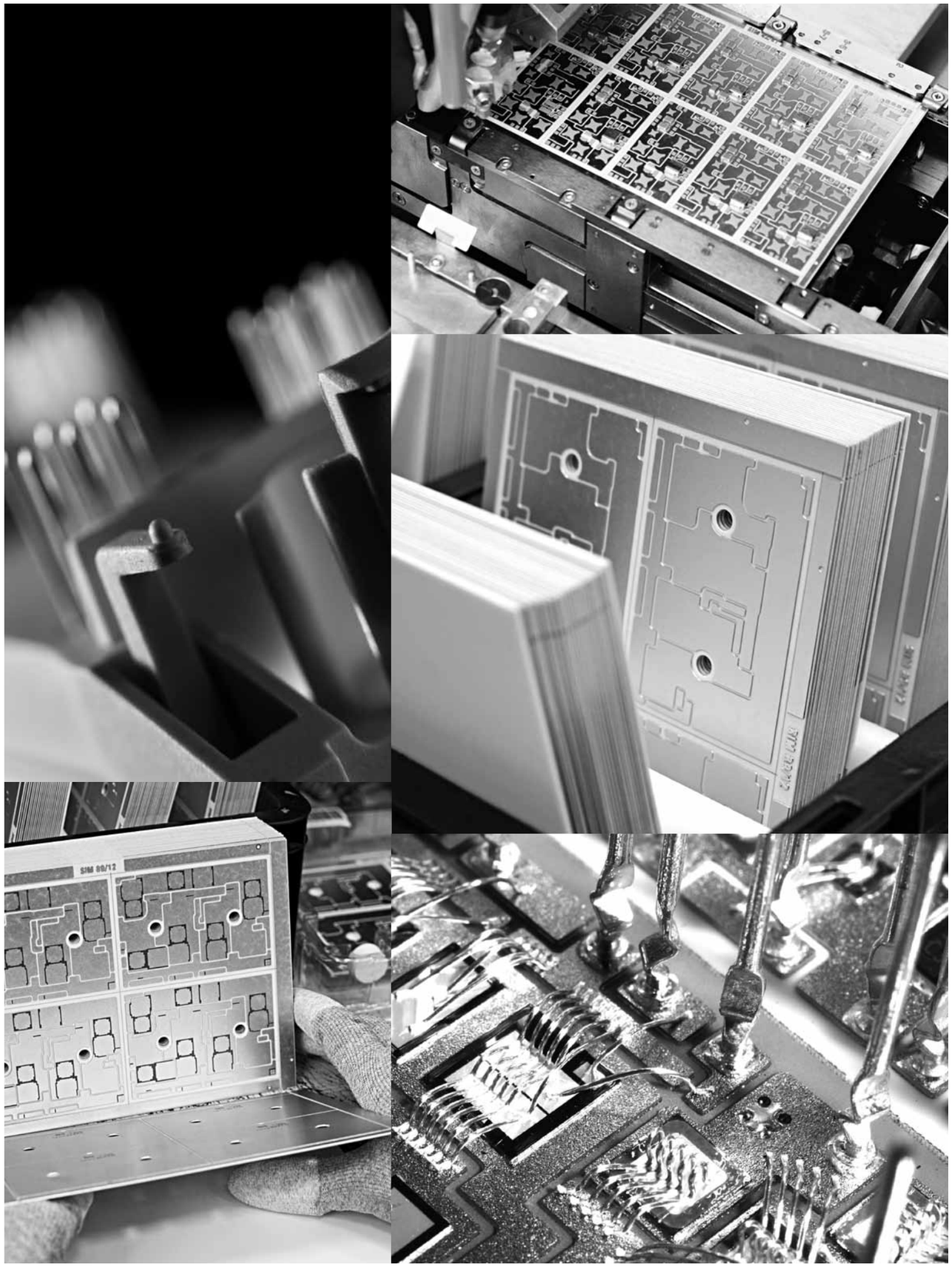

INTERCONNECTION TECHNOLOGIES

Sintered Ag (Die Attach Technology)

High-end power modules must meet challenging demands for thermal and electrical performance and reliability. Vincotech has taken sintering to the next level to meet these demands and is able replace all soldered points with sintered connections.

Sintering – the Multiple Solution

/ All Vincotech suppliers' chips may be sintered
/ Chip substrate and baseplate sintered in one step
/ Multi-component capability – chip, NTC and shunt may be sintered together
/ Multi-level capability – up to 3 mm difference in height can be accommodated
/ Lower thermal expansion rates for improved load cycling capability

INTERCONNECTION

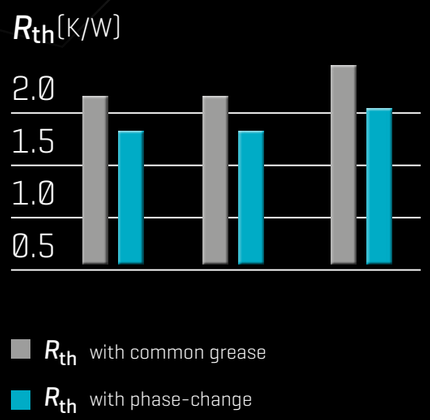

INTERCONNECTION TECHNOLOGIES
Phase-change Material. Pre-applied Thermal Interface Material.

The benefits of using phase-change material to enable thermal conductivity between the module and heat sink are considerable.

The phase-change material is solid at room temperature. This makes it smear-resistant during transportation and module assembly. Our in-house screen-printing process ensures the material's thickness configured and optimized for maximum heat transfer capability.

Benefits:

/ Up to 20 % R_{th} reduction from T_j to heat sink for Al_2O_3-based modules
/ Four times higher thermal conductivity and significantly lower thermal resistance than standard grease
/ 30 % R_{th} reduction from T_j to heat sink for AlN-based high performance modules
/ Solid, non-sticky surface – minimizes contamination risk, prevents layer damage

Features:

/ Fast, easy assembly of modules
/ Thermal conducting material with optimized thickness
/ Better R_{th} and reduced risk of DCB cracking
/ Easier production process; no need for screen printing facilities
/ Automated screen printing for utmost precision and reliability
/ No risk of smearing thermal paste; material is solid at room temperature
/ Standard solder profile applicable (e.g. J-STD-001, J-STD-003)
/ Non-stick surface, resistant to dirt, dust and other contaminants

Properties:

Parameter	Value	Unit
Thermal conductivity	3.4	W/mK
Phase change temperature	+45	°C

ORDER CODES

Example order code for phase-change material:
Version 1: V23990-P840-A48-/3/-PM
Version 2: 10-FZ06BIA045FH01-P897E10-/3/

Please ask your regional contact about the availabilityof phase-change material.
Option code for the phase-change material for modules is -/3/.

INTERCONNECTION TECHNOLOGIES
Press-fit Technology. Press to Save Time.

Vincotech's Press-fit technology reduces PCB assembly time and effort considerably.

Well established in the automotive industry, the Press-fit pin eliminates the need for soldering. This cuts process time and costs, and boosts production output capacity.

With no need to solder modules, engineers enjoy great flexibility in design. The module can easily be mounted on top or bottom of the PCB at no extra cost and effort.

Benefits:

/ Eliminates costly additional soldering
/ Pins are in the same position as solder pins
/ High current carrying capability (30 A @ 80 °C)
/ Flexible mounting onto the power module DCB
/ Cuts production costs
/ Reliable cold-welding connection to PCB
/ No PCB hole damage to enable reuse
/ Thermo-mechanical push-and-pull-force relief

Features:

/ Approved rounded Press-fit area
/ Complies with DIN and IEC standards
/ Tapered pin head
/ Available for almost all housings

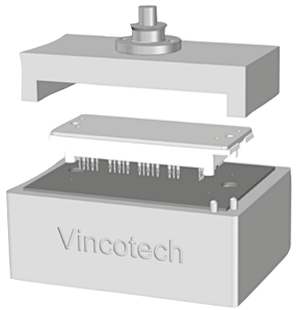

ORDER CODES FOR PRESS-FIT PINS:

Version 1: Press-fit option is shown as an additional letter "Y" at the end of option code.
Example order code version 1: V23990-P840-F49Y-PM

Version 2: Press-fit option is indicated by "P" at the beginning and "Y" at the end.
Example order code version 2: 10-PZ06BIA045FH01-P897E10Y

EXCEPTIONAL HOUSINGS
*flow*90 Housing. Twist 90° to Save Space.

Detailed view of the *flow*90 module

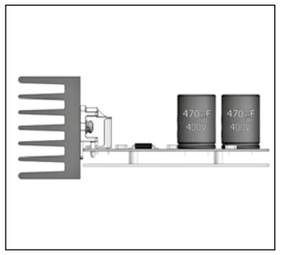

Mounting concept with a *flow*90 module

Vincotech *flow*90 power modules are the perfect match for book-sized inverters and 19-inch rack-mounted power supplies with a 90-degree angle between the heat sink and PCB.

Featuring pins arrayed at a 90-degree angle, *flow*90 0 and *flow*90 1 modules are available as standard products with CON, PIM, and PACK configurations.

This package is also a good choice for custom topologies for switched-mode power supplies, battery chargers and the like. There is no need for a flexible PCB, and *flow*90 modules make the most of the PCB to minimize the application footprint.

Modules with pre-applied phase-change material are available on demand.

Vincotech can handle this critical task to spare customer the precise application effort. With all these purpose-driven features, the *flow*90 is the module of choice for many applications that benefit from 90-degree mounting.

Features:

/ Complies with DIN and IEC standards
/ Topologies are easily customized
/ Pre-applied phase-change material available on demand

Benefits:

/ Space-saving housing enabling a 90-degree angle between the heat sink and PCB
/ Accommodates standard heat sinks, so no costly L-shaped versions needed
/ Easy clip-in mounting into the PCB
/ Enables installation on the same side of the PCB as other through-hole components
/ Can be wave-soldered along with the other components in one pass
/ Perfect match for book-sized inverters and 19-inch rack-mounted power supplies

EXCEPTIONAL HOUSINGS
flow 0B Housing. The Compact Cost-cutter.

This ultra compact housing for small power applications is an excellent choice for cost-effective, space-saving designs.

A condensed version of the *flow* 0 housing, the *flow* 0B housing is sized for smaller power applications, providing a compact alternative to meet the demands of smaller power embedded drives and frequency inverters.

The first of the two debut topologies in the *flow* 0B housing consists of a PIM + PFC and is called *flow*PIM® 0B + PFC

Equipped with a single-phase input rectifier, a PFC booster and a three-phase inverter, it uses high-speed 650 V IGBTs for the PFC. A DC capacitor and an NTC are integrated. The *flow*PIM® 0B + PFC module rated for the highest current features a PFC circuit based on a nominal chip current of 15 A and an inverter section equipped with 10 A components.

The other topology is called *flow*PACK 0B. This standard inverter topology with 6 IGBTs and freewheeling diodes is available with 1200 V and 600 V ratings.

The 600 V variant covers currents ranging from 6 A to 30 A; the 1200 V variant comes with currents ratings between 4 A and 15 A.

Features:

/ Single-screw heat sink mounting
/ Built-in standoffs with optional PCB screw mounting
/ For very compact designs
/ 17 mm in height for greater creepage distance
/ Thin 0.38 mm Al_2O_3 ceramic for improved thermal performance
/ Solder or Press-fit pins
/ Optionally with pre-applied, highly conductive TIM with 3.4 W/mK
/ Size: 36 mm x 34 mm
/ 17 mm height
/ Phase-change material

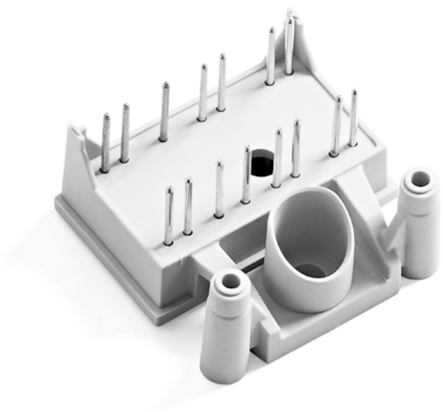

EXCEPTIONAL HOUSINGS

VINco X. The Low-inductive High-power Package.

The low-inductive design of the VINco X package featuring onboard DC capacitors extends maximum switching frequencies up to 20 kHz, which is unique in this power range.

A MODULAR PACKAGE

/ Low-inductive PCB
/ Optional onboard snubber capacitors
/ High-current screw terminals
/ Independent baseplates for better thermal performance

Benefits:

/ Optimized for three-level topologies
/ Enables high switching frequencies
/ Fully symmetrical layouts
/ Modular construction
/ Low-inductive path for easy paralleling
/ Optional snubber capacitors
/ Multiple chipset combinations
/ Available with phase-change material

Features:

/ MNPC up to 1800 A
/ NPC Up to 1200 A
/ Stray Inductance: 5 – 15 nH* NPC low-inductive path / 3 – 10 nH* MNPC
/ Easy paralleling: <5 nH module to module

* Depending on model

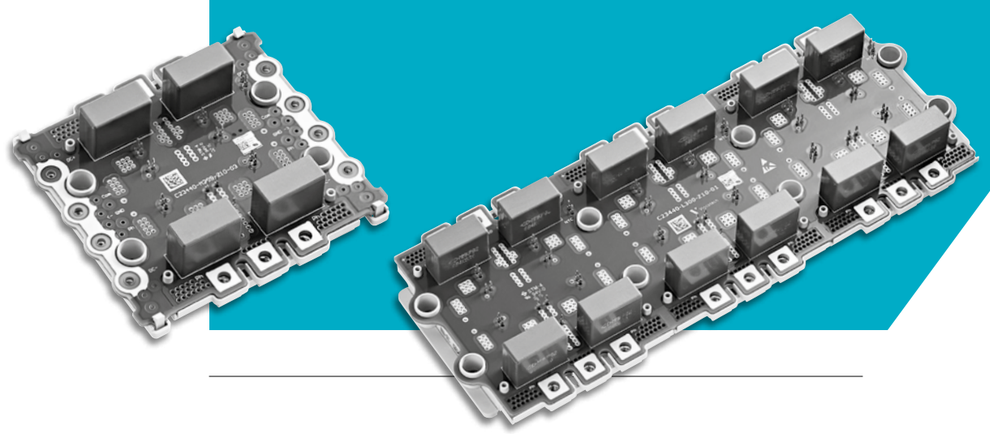

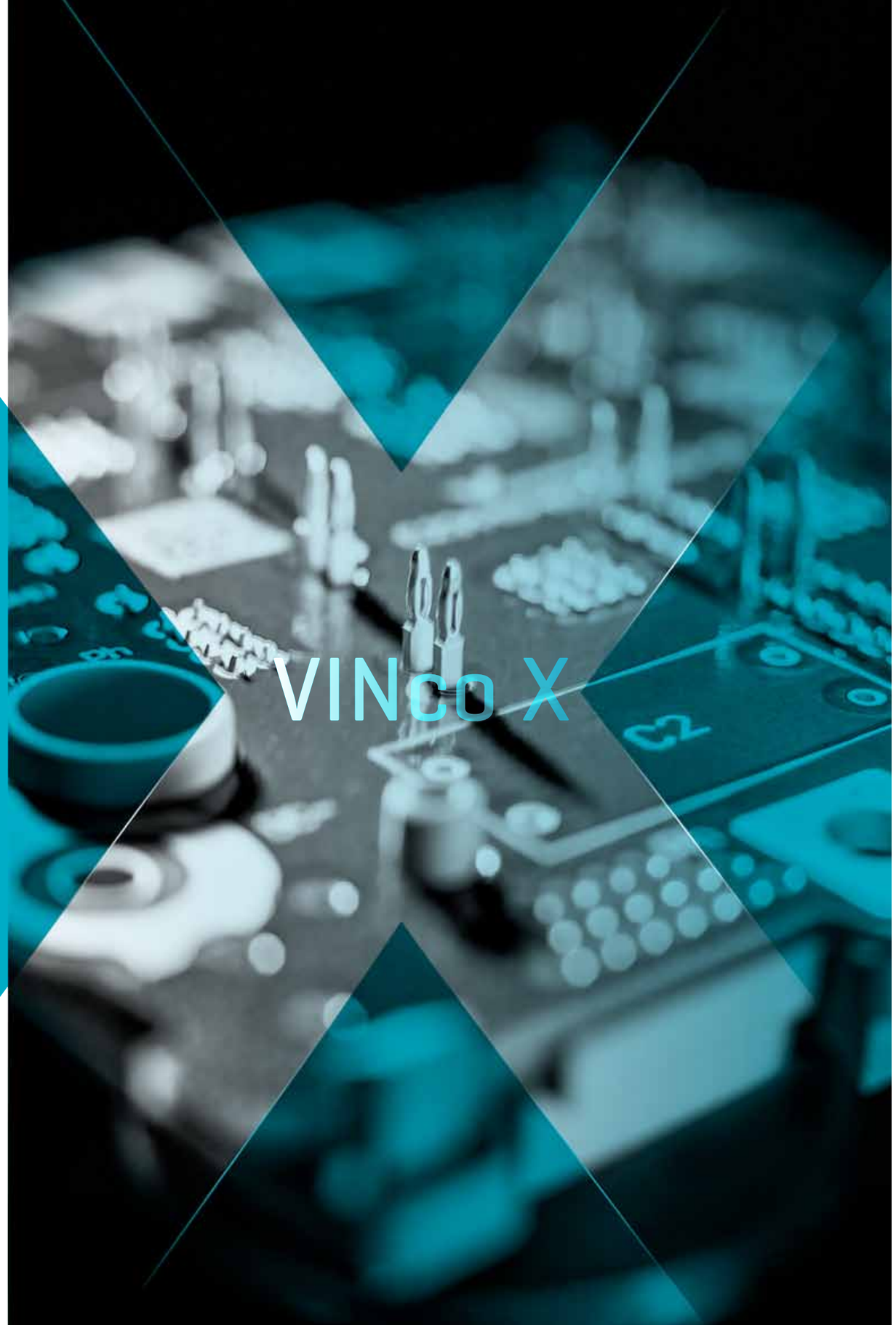

EXCEPTIONAL HOUSINGS
MiniSKiiP®– Spring Contacts Connection.

For 10+ years Vincotech offers MiniSKiiP® modules with solderless spring contact mounting technology and pre-applied thermal paste. These second-source modules are affixed with SPRiNG contacts and just a single screw to create electrical and thermal connections and make assembly an exercise in convenience. There is no need for time-consuming, costly mounting procedures, and even entire modules are easy to replace with SPRiNG contacts should the need arise.

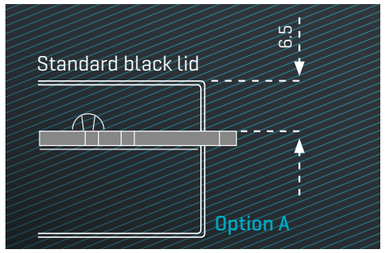

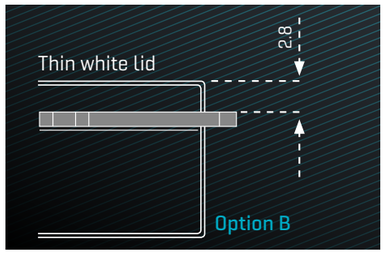

Lids:
Two lids are available for all MiniSKiiP® modules:

/ Standard black 6.5 mm version allowing SMD parts to be mounted below the lid
/ Thin white 2.8 mm version sized for highly compact mechanical designs

Thermal interface material features:
/ Fast and easy module and PCB assembly
/ Thermal conducting material with optimized thickness
/ Optimized thermal resistance
/ Easy production process; no need for screen printing facilities
/ Automated screen printing for utmost precision and reliability
/ TIM available containing silicone or silicon-free

Properties:

Material	Wacker® Paste P12
Thermal conductivity	0.81 W/mK

Order codes:
Example order code for different lids and applied grease:
Version 1:
V23990-K220-A40-/1A/-PM
Version 2:
80-M206BIA045FH-K999E10-/1A/

Please ask your regional contact about the availability of MiniSKiiP® options.

SILICON-FREE PRODUCTS

Thermal Grease / Details	Lid	Order Code
-	Standard (6.5 mm)	-/0A/
-	Thin (2.8 mm)	-/0B/
Wacker® Paste P12 / silicone-based	Standard (6.5 mm)	-/1A/
Wacker® Paste P12 / silicone-based	Thin (2.8 mm)	-/1B/
Müller Ahlhorn Thermigrease® TG 20032 / silicone-free	Standard (6.5 mm)	-/4A/
Müller Ahlhorn Thermigrease® TG 20032 / silicone-free	Thin (2.8 mm)	-/4B/

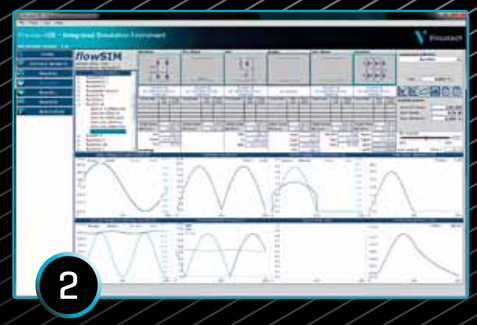

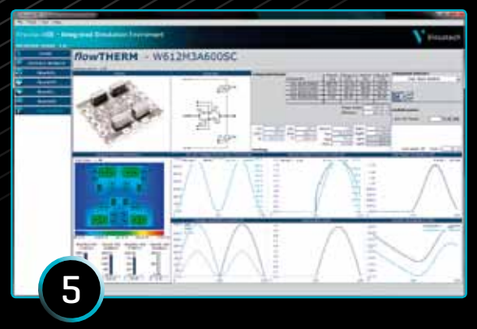

INTEGRATED SIMULATION ENVIRONMENT TOOL

VincotechISE is an integrated simulation and selection environment for power modules.

It contains updated versions of the legacy tools *flow*SIM, *flow*SOL and *flow*SEL. Two other tools, *flow*MIS and the new thermal simulator *flow*THERM, are available; calculations can be provided on special request.

All power loss and temperature calculations are based on real measurements taken of each module.

01 *flow*SOL

is a simulation tool for solar power modules and similar applications. It features a parameter setup and function blocks tailored to this purpose and covers single-phase and three-phase power modules for transformer-less and transformer-based topologies.

02 *flow*SIM

calculates Vincotech power modules for industrial drive applications. Its GUI looks much like that of the *flow*SOL tool, but is geared towards industrial drives. This revamped user interface affords you in-depth insight into how parameter adjustments affect losses, temperatures and efficiency.

03 *flow*SEL

is a power module selector designed to help you find the solution best suited to your industrial drive application. Entering all the key application parameters is an exercise in convenience with its interactive schematic.

04 *flow*MIS

simulates power modules power and temperature characteristics based on an adjustable mission profile. Calculation data is available on request only.

05 *flow*THERM

gives you, as its name suggests, an inside look into the module to analyze thermal behavior. A thermal image of the power module's DCB provides detailed information on temperatures and thermal distribution. This data is available on request only.

Software Download

Step 01:
Download and install LabVIEW Runtime Engine once (if not already installed).

Step 02:
Download Vincotech ISE into your simulation directory.

Step 03:
Start Vincotech ISE.

application-specific solutions

Vincotech delivers application-specific solutions **with utmost creative choice when it comes to design.**

Vincotech delivers solutions tailored to your applications.

Completely independent of component suppliers, we cherry-pick what's best for you from more than ten different leading semiconductor suppliers to build modules that benefit your business. Experience the peace of mind that comes with knowing your needs are being met.

Customers enjoy great freedom of choice.

They are not locked in into one system or tied to standard products or specific suppliers. Free to configure their products as they see fit, they can find the best solution with a lot less effort.

Vincotech delivers to customer's specifications – that is, more efficient products with better thermal connections, optimized to improve their applications.

In our book, 'optimized' means more cost-effective, smaller, longer-lasting and easier-mounting modules that speed up production.

That's why Vincotech attaches such great value to its simulation and testing tools. The tools interactively calculate modules' electrical and thermal behavior based on fully measured parameters.

If you want your power module to be application-specific, it has to be Vincotech.

APPLICATION-SPECIFIC SOLUTION
Vincotech is Fast and Responsive. And that Agility Speed Benefits You.

Vincotech provides a wide selection of standard housings to keep your design options wide open. We're there for you at every step of your journey. When you opt for Vincotech, you will experience true face-to-face support from a most responsive supplier.

Our sample lead times are remarkably short at just **four weeks** on average. Modules get approved that much faster, so customers' production runs commence sooner and their products are marketed much earlier. To this end, we make ordering easy, eliminate processes that do not add value, and keep the production line flexible. Vincotech is agile enough to handle fluctuating demand even at short notice and deliver the goods just in time.

Speed and Flexibility – that sums up what Vincotech is all about.
Vincotech's customer focus, paired with efficient development and production flows, saves you time.

Fast time to market:

/ The speed at which we can deliver the initial technical and commercial proposal (including a chip list, electrical configuration, mechanical details, pin-out and pin-positioning, options, etc) sets standards for the industry to follow.
/ Advanced simulation tools speed up component selection and mapping.
/ Sample lead time is phenomenally short (four weeks on average).
/ Module approval comes much faster with pre-qualified components and technologies.

Cost efficiency:

/ Vincotech is fully independent of chip suppliers - choose your preferred chip from more than ten different leading semiconductor manufacturers (including SiC technology).
/ Enjoy the mechanical flexibility that comes with a broad variety of standard housings and free pin positioning.
/ Benefit from different interconnects (solder, Press-fit, screw and spring terminals) and stress-relief zones wherever they are needed.
/ Take advantage of readily customized standard products. Customers are free to cherry-pick from the largest selection of semiconductors and a wealth of pre-qualified topologies.

Flexibility, fast time to market, cost-effectiveness beyond our products, an innovative spirit, and a service-minded outlook – that´s what we´re all about.

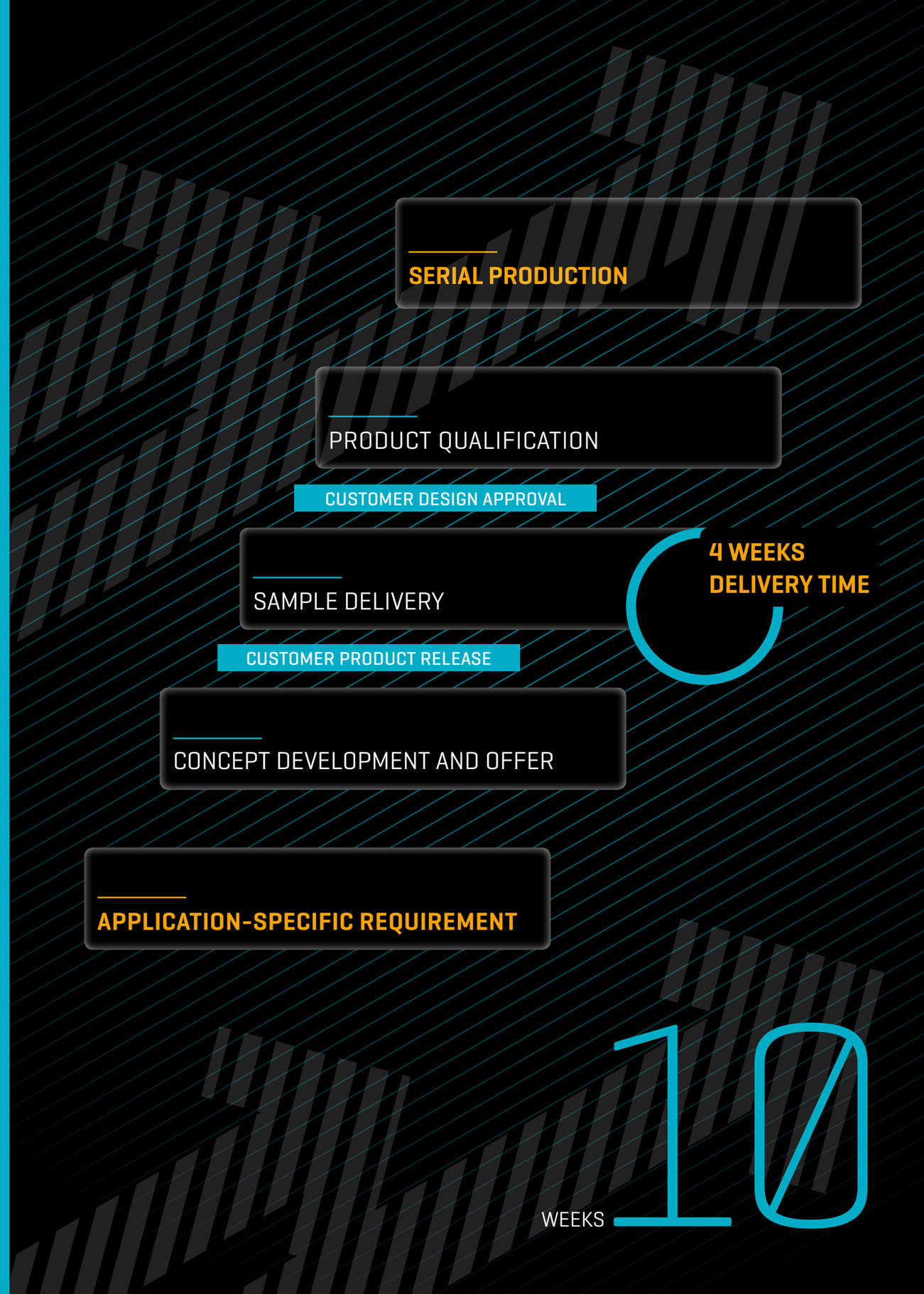

Vincotech offers more than **40 standard families of power modules** serving a wide and **diverse range of applications**.

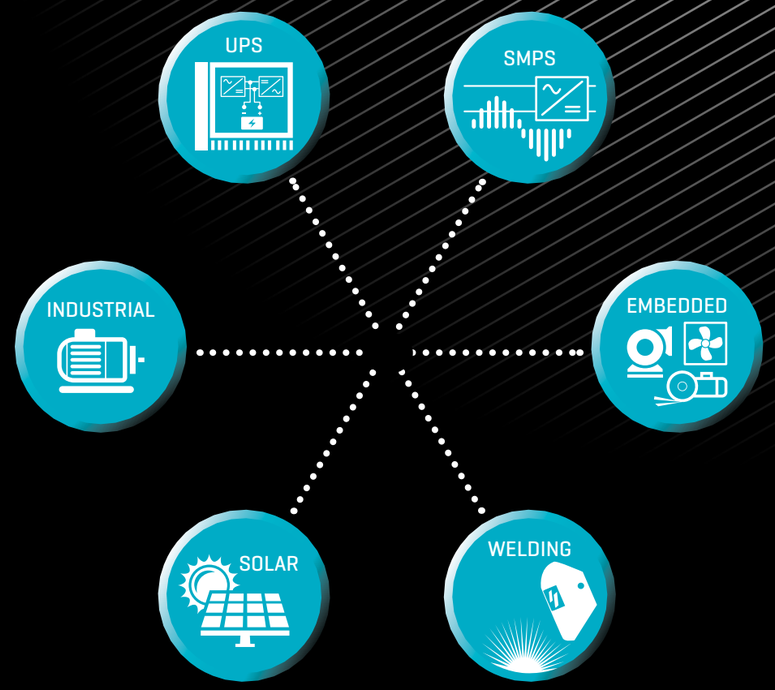

INDUSTRIAL DRIVES

Vincotech offers power integrated modules (PIM/CIB – converter, inverter and brake), sixpacks (three-phase modules), half-bridges and rectifier modules engineered to support standard drive applications for industrial use and motor power ranges from 1 kW to 60 kW.

For example: *flow*PIM® 0 | *flow*PACK 1 | *flow*PIM® 2

EMBEDDED DRIVES

Drives in circulation pumps, fans, air-conditioners, and other devices connected to the public power grid usually require active power factor correction (PFC). These PIM and IPM modules feature optional integrated PFC.

For example: *flow*PIM® 0 + PFC | *flow*IPM 1B

POWER SUPPLIES

Switched-mode power supplies are used in industrial applications with power electronics and in battery chargers. Our modules are equipped with PFC circuits (AC/DC), half- and H-bridges, and step-up and step-down converters (DC/DC) for these applications.

For example: *flow*PFC 0 | *fast*PACK 0 H

SOLAR INVERTERS

The photovoltaic market requires DC/DC converter circuits that adjust the solar input voltage to the maximum power point (MPP) and DC/AC converters to deliver solar energy to the public power grid or to load an energy storage. Vincotech's innovative modules supportup to 250 kW.

For example: *flow*SOL 0 | *flow*SOL 1 | *flow*3xPHASE 0 SiC
*flow*3xBOOST 0 SiC for < 100 kW: *flow*MPC 0
*flow*MNPC 1 and *flow*MNPC 2 for > 100 kW: VINcoMNPC X4

UNINTERRUPTABLE POWER SUPPLIES (UPS)

Power components for UPS applications. Modules for AC/DC and DC/AC power conversion. Topologies such as single- and three-phase rectifiers, half- and H-bridges, boosters, and NPC/MNPC/AMNPC. Power ranges up to 200 kW.

For example: for < 100 kW: *flow*MNPC 0 | *flow*MNPC 1 and *flow*MNPC 2
for > 100 kW: VINcoMNPC X

WELDING

Inverter welding units need modules that can handle high switching frequencies in resonant mode or in zero voltage switching (ZVS) mode, and are equipped with H- and half-bridge topologies. Our modules also come with PFC to draw maximum power from the single-phase grid.

For example: *flow*PFC 0 | *fast*PACK 0 H

OVERVIEW / APPLICATIONS / HOUSINGS

RECTIFIER/BRC

APPLICATIONS
/ INDUSTRIAL DRIVES
/ POWER SUPPLY
/ UPS
/ WELDING

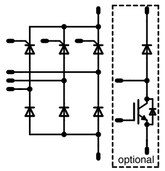

SIXPACK

APPLICATIONS
/ INDUSTRIAL DRIVES
/ EMBEDDED DRIVES
/ UPS

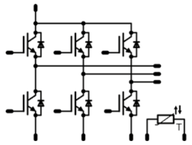

SIXPACK + RECTIFIER

APPLICATIONS
/ INDUSTRIAL DRIVES

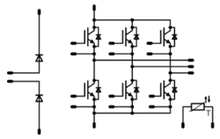

SEVENPACK

APPLICATIONS
/ INDUSTRIAL DRIVES

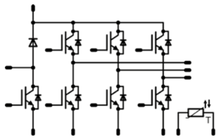

PIM (CIB)

APPLICATIONS
/ INDUSTRIAL DRIVES
/ EMBEDDED DRIVES

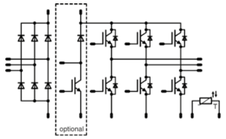

PIM WITH PFC

APPLICATIONS
/ EMBEDDED DRIVES

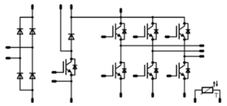

IPM CIP

APPLICATIONS
/ INDUSTRIAL DRIVES
/ EMBEDDED DRIVES

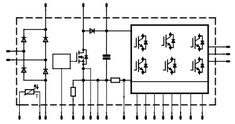

IPM CI

APPLICATIONS
/ INDUSTRIAL DRIVES
/ EMBEDDED DRIVES

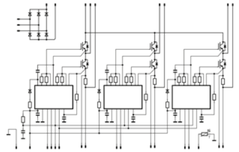

HALF-BRIDGE

APPLICATIONS
/ INDUSTRIAL DRIVES
/ POWER SUPPLY
/ SOLAR INVERTERS
/ UPS
/ WELDING

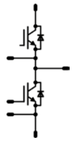

FULL-BRIDGE

APPLICATIONS
/ POWER SUPPLY
/ SOLAR INVERTERS
/ UPS
/ WELDING

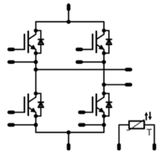

PFC

APPLICATIONS
/ EMBEDDED DRIVES
/ POWER SUPPLY
/ WELDING

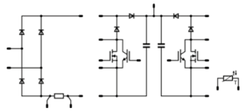

RPI

APPLICATIONS
/ POWER SUPPLY
/ WELDING

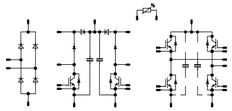

ONE-PHASE SOLAR

APPLICATIONS
/ POWER SUPPLY
/ SOLAR INVERTERS
/ WELDING

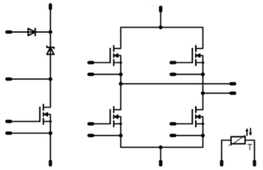

BOOSTER

APPLICATIONS
/ POWER SUPPLY
/ SOLAR INVERTERS
/ UPS

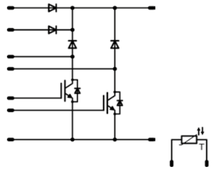

BOOSTER SYMMETRIC

APPLICATIONS
/ POWER SUPPLY
/ SOLAR INVERTERS
/ UPS

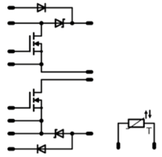

THREE-PHASE PFC

APPLICATIONS
/ POWER SUPPLY
/ UPS

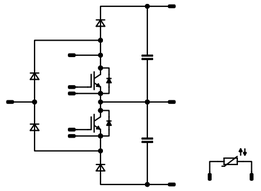

NPC

APPLICATIONS
/ POWER SUPPLY
/ SOLAR INVERTERS
/ UPS

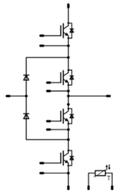

MNPC

APPLICATIONS
/ POWER SUPPLY
/ SOLAR INVERTERS
/ UPS

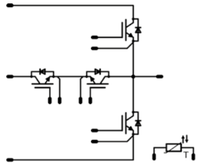

	flow 0B	flow 0	flow 1 flow 1B	flow 2	flow90 0 flow90 1	VINco X4 VINco X8 / VINco X12	MiniSKiiP® 0 / MiniSKiiP® 1 MiniSKiiP® 2 / MiniSKiiP® 3
RECTIFIER / BRC	flowCON 0B (P. 40 ¦ 41)	flowCON 0 (P. 38 ¦ 39)		flowCON 2 (P. 42 ¦ 43)	flow90CON 1 (P. 40 ¦ 41)		
SIXPACK	flowPACK 0B (P. 48 ¦ 49)	flowPACK 0 (P. 46 ¦ 47)	flowPACK 1 (P. 50 ¦ 51)	flowPACK 2 (P. 50 ¦ 51)	flow90PACK 0 (P. 46 ¦ 47) flow90PACK 1 (P. 48 ¦ 49)		MiniSKiiP® PACK 1 (P. 52 ¦ 53) MiniSKiiP® PACK 2 (P. 52 ¦ 53) MiniSKiiP® PACK 3 (P. 54 ¦ 55)
SIXPACK + RECTIFIER			flowPACK 1+R (P. 58 ¦ 59)	flowPACK 2+R (P. 58 ¦ 59)			
SEVENPACK		flow7PACK 0 (P. 62 ¦ 63)	flow7PACK 1 (P. 62 ¦ 63)	flow7PACK 2 (P. 64 ¦ 65)			
PIM		flowPIM® 0 (P. 68 ¦ 69)	flowPIM® 1 (P. 68 ¦ 69)	flowPIM® 2 (P. 70 ¦ 71)	flow90PIM® 1 (P. 70 ¦ 71)		MiniSKiiP® PIM 0 (P. 72 ¦ 73) MiniSKiiP® PIM 1 (P. 72 ¦ 73) MiniSKiiP® PIM 2 (P. 74 ¦ 75) MiniSKiiP® PIM 3 (P. 74 ¦ 75)
PIM WITH PFC	flowPIM® 0B+PFC (P. 78 ¦ 79)	flowPIM® 0 + PFC (P. 78 ¦ 79)			flow90PIM 1 + PFC (P. 80 ¦ 81)		
IPM CIP			flowIPM 1B (CIP) (P. 84 ¦ 85)				
IPM CI			flowIPM 1B (CI) (P. 88 ¦ 89)				
HALF BRIDGE		flowPHASE 0 (P. 92 ¦ 93) flowPHASE 0+NTC					
FULL BRIDGE		fastPACK 0 H (P. 100 ¦ 101) fastPACK 0 HC (P. 100 ¦ 101) flowPACK 0 MOS (P. 104 ¦ 105) fastPACK 0 SiC (P. 106 ¦ 107) flowPACK 0 SiC (P. 106 ¦ 107)	flowPACK 1 H (P. 102 ¦ 103) fastPACK 1 H (P. 102 ¦ 103) fastPACK 1 H (P. 104 ¦ 105) flowPACK 1 SiC (P. 108 ¦ 109)				
PFC		flowPFC 0 (P. 112 ¦ 113) flowPFC 0 CD					
RPI			flowRPI 1 (P. 116 ¦ 117)				
ONE-PHASE SOLAR		flowSOL 0 BI (TL) (P. 120 ¦ 121) flowSOL 0 BI (T) primary	flowSOL 1 BI (TL) (P. 122 ¦ 123) flowSOL 1 BI (T) primary				
BOOSTER		flowBOOST 0 (P. 126 ¦ 127) flow2xBOOST 0 (P. 126 ¦ 127) flow3xBOOST 0 (P. 128 ¦ 129) flow3xBOOST 0 SiC (P. 128 ¦ 129) flowBOOST 0 SiC (P. 130 ¦ 131)					
BOOSTER SYMMETRIC		flowBOOST 0 symmetric (P. 134 ¦ 135) flowBOOST 0	flowBOOST 1 symmetric (P. 136 ¦ 137)	flowBOOST 2 symmetric (P. 136 ¦ 137)		VINcoBOOST X4 symmetric (P. 138 ¦ 139)	
THREE-PHASE PFC		flowSPFC 0 (P. 142 ¦ 143)					
NPC		flowNPC 0 IGBT (P. 146 ¦ 147) flowNPC 0 MOS (P. 146 ¦ 147) flowNPC 0 parallel (P. 148 ¦ 149)	flowNPC 1 (P. 148 ¦ 149) flow3xNPC 1 (P. 150 ¦ 151) flowNPC 1 split (P. 150 ¦ 151) flowNPC 1 MOS (P. 152 ¦ 153)	flowNPC 2 (P. 152 ¦ 153)		VINcoNPC X4 (P. 154 ¦ 155) VINcoNPC X8 (P. 154 ¦ 155) VINcoNPC X12 (P. 156 ¦ 157)	
MNPC		flowMNPC 0 (P. 160 ¦ 161) flowMNPC 0 SiC	flowMNPC 1 (P. 162 ¦ 163) flow3xMNPC 1	flowMNPC 2 (P. 164 ¦ 165)		VINcoMNPC X4 (P. 166 ¦ 167) VINcoMNPC X12	

/ RECTIFIER

/ SIXPACK
/ SIXPACK + RECTIFIER
/ SEVENPACK
/ PIM
/ PIM WITH PFC
/ IPM CIP
/ IPM CI
/ HALF-BRIDGE
/ FULL BRIDGE
/ PFC
/ RPI
/ ONE-PHASE SOLAR
/ BOOSTER
/ BOOSTER SYMMETRIC
/ THREE-PHASE PFC
/ NPC
/ MNPC

/ HOUSINGS
/ HOUSING DIMENSIONS

*flow*CON 0

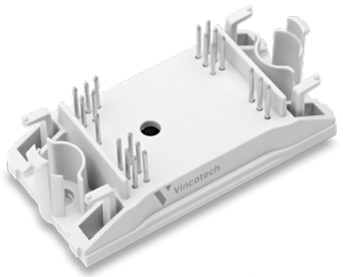

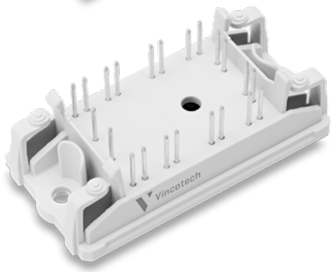

Facts

- / Input rectifier with diodes or optionally half controlled
- / Optionally w/o brake and reduced rectifier
- / Complementary to *flow*PHASE 0, *flow*PACK 0/1/2, *fast*PHASE 0
- / Clip-in PCB mounting possible

Housing

- / *flow* 0 17 mm
- / *flow* 0 17 mm 4-clip

www.vincotech.com/flowCON-0

Applications

/ INDUSTRIAL DRIVES / POWER SUPPLY / UPS / WELDING

/ P59x

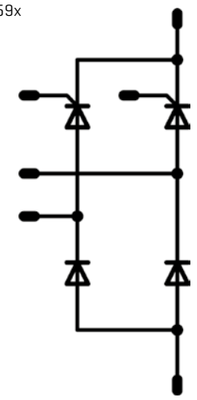

/ P60x

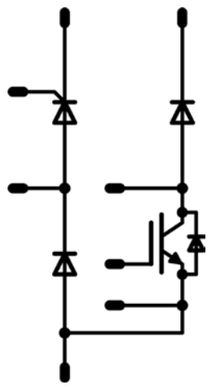

/ P64x

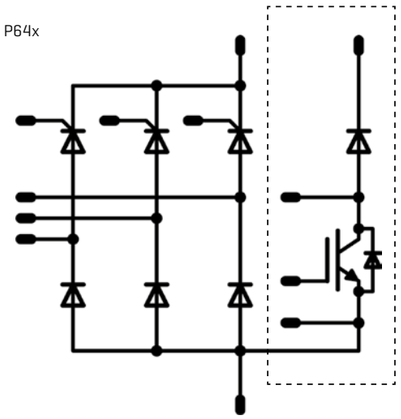

Part-No	Voltage [V]	Current [A]	Technology	Comments
V23990-P649-G10-PM	1600	34	Thyristor	
V23990-P649-H10-PM	1600	34	Thyristor	w/o brake
V23990-P640-H10-PM	1600	42	Thyristor	w/o brake
V23990-P640-G10-PM	1600	42	Thyristor	
V23990-P649-H-PM	1600	50	Rectifier	w/o brake
V23990-P649-G-PM	1600	50	Rectifier	
V23990-P640-G20-PM	1600	75	Rectifier	2-clip
V23990-P640-H-PM	1600	75	Rectifier	w/o brake
V23990-P640-G-PM	1600	75	Rectifier	
V23990-P590-J19-PM	1600	75	Thyristor	complementary to P600-119
V23990-P600-I19-PM	1600	75	Thyristor	complementary to P590-119
V23990-P590-J09-PM	1600	105	Rectifier	complementary to P600-109
V23990-P600-I09-PM	1600	105	Rectifier	complementary to P590-I09

*flow*CON 0B

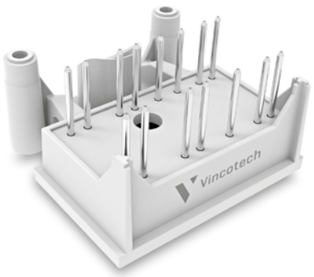

Facts

/ Modular input rectifier with brake
/ Complementary to *flow*PACK 0B
/ New ultra-compact housing with single-screw heat sink mounting

Housing

/ *flow* 0B 17 mm

www.vincotech.com/flowCON-0B

Applications

/ INDUSTRIAL DRIVES / POWER SUPPLY / UPS / WELDING

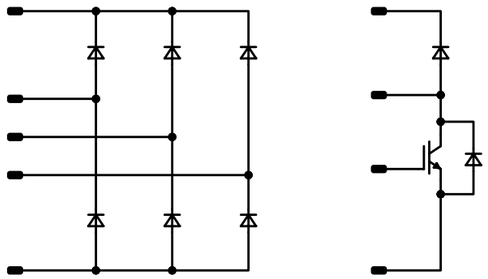

*flow*90CON 1

Facts

/ Input rectifier optionally half controlled with or without brake
/ Compatible with *flow*90 PACK 1
/ Clip-in PCB mounting
/ Clip or screw-on heat sink mounting

Housing

/ *flow* 90 1

www.vincotech.com/flow90CON-1

Applications

/ INDUSTRIAL DRIVES / POWER SUPPLY / UPS / WELDING

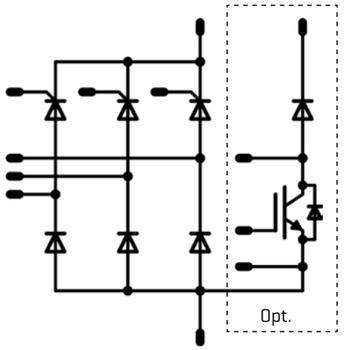

Part-No	Voltage [V]	Current [A]	Technology	Comments
10-0B166BA028SC-M989G09	1600	35	Rectifier	

Part-No	Voltage [V]	Current [A]	Technology	Comments
V23990-P717-G10-PM	1600	36	Thyristor	
V23990-P717-H10-PM	1600	36	Thyristor	w/o brake
V23990-P717-G-PM	1600	39	Rectifier	
V23990-P717-H-PM	1600	39	Rectifier	w/o brake
V23990-P718-G10-PM	1600	43	Thyristor	
V23990-P718-H10-PM	1600	43	Thyristor	w/o brake
V23990-P718-G-PM	1600	52	Rectifier	
V23990-P718-H-PM	1600	52	Rectifier	w/o brake
V23990-P719-G-PM	1600	75	Rectifier	
V23990-P719-H-PM	1600	75	Rectifier	w/o brake

*flow*CON 2

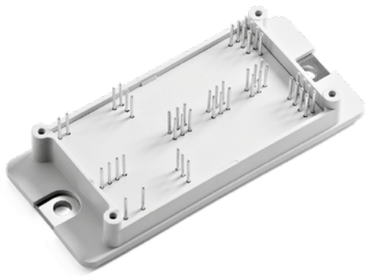

Facts

/ Input rectifier with brake
/ For high power drive applications
/ With *flow*PACK 2 up to 30 kW inverters
/ Temperature sensor

Housing

/ *flow* 2 17 mm

www.vincotech.com/flowCON-2

Applications

/ INDUSTRIAL DRIVES / POWER SUPPLY / UPS / WELDING

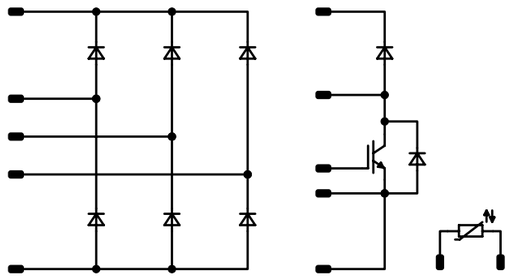

MiniSKiiP® CON 2

NEW

Facts:

/ Three-phase half controlled rectifier
/ Brake chopper
/ Temperature sensor

Housing:

/ MiniSKiiP® 2

www.vincotech.com/MiniSKiiPCON-2

Applications

/ INDUSTRIAL DRIVES / POWER SUPPLY / UPS / WELDING

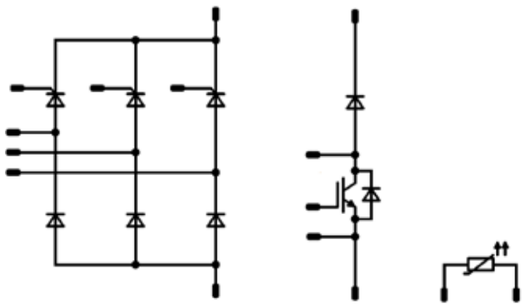

Part-No	Voltage [V]	Current [A]	Technology	Comments
30-F2166BA150RW-L267G09	1600	150	Rectifier	
30-F2166BA150RW01-L267G19	1600	150	Rectifier	enhanced brake chopper

Part-No	Voltage [V]	Current [A]	Technology	Comments
80-M0166BA060RW02-K369G	1600	60	Thyristor	

*flow*90PACK 0

Facts

- IGBT4 (1200 V) technology for low saturation losses and improved EMC behavior
- Supports designs with 90° mounting angle
- Clip-in PCB mounting
- Clip or screw-on heat sink mounting

Available options:

F40: housing with clips

F41: housing w/o clips

Housing

- *flow*90 0

www.vincotech.com/flow90PACK-0

Applications

- INDUSTRIAL DRIVES

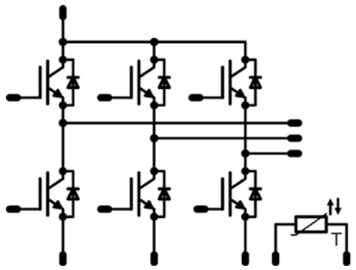

Part-No	Voltage [V]	Current [A]	Technology	Comments
10-R0126PA008SC-M627F40	1200	8	IGBT4	
10-RZ126PA008SC-M627F41	1200	8	IGBT4	
10-R0126PA015SC-M628F40	1200	15	IGBT4	
10-RZ126PA015SC-M628F41	1200	15	IGBT4	
10-R0126PA025SC-M629F40	1200	25	IGBT4	
10-RZ126PA025SC-M629F41	1200	25	IGBT4	
10-R0126PA035SC-M620F40	1200	35	IGBT4	
10-RZ126PA035SC-M620F41	1200	35	IGBT4	

*flow*PACK 0

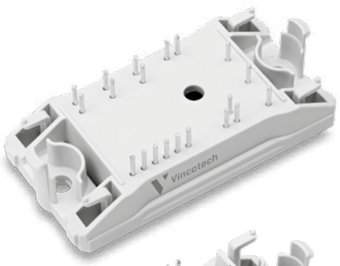

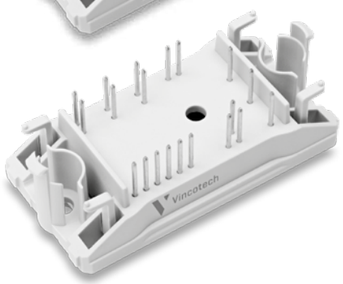

Facts

- IGBT3 (600 V) and IGBT4 (1200 V) technology for low saturation losses
- Compact and low inductance design
- Open emitter configuration available upon request

Housing

- *flow* 0 12 mm (F48)
- *flow* 0 17 mm (F49)

www.vincotech.com/flowPACK-0

Applications

- INDUSTRIAL DRIVES

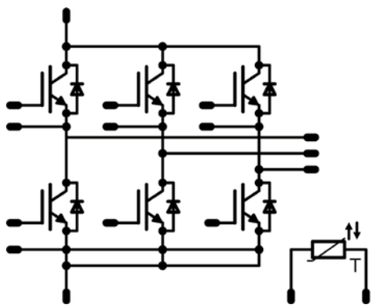

Part-No	Voltage [V]	Current [A]	Technology	Comments
V23990-P864-F48-PM	600	30	IGBT3	
V23990-P864-F49-PM	600	30	IGBT3	
V23990-P865-F48-PM	600	50	IGBT3	
V23990-P865-F49-PM	600	50	IGBT3	
V23990-P866-F48-PM	600	75	IGBT3	
V23990-P866-F49-PM	600	75	IGBT3	
V23990-P868-F48-PM	1200	15	IGBT4	
V23990-P868-F49-PM	1200	15	IGBT4	
V23990-P869-F48-PM	1200	25	IGBT4	
V23990-P869-F49-PM	1200	25	IGBT4	
V23990-P860-F48-PM	1200	35	IGBT4	
V23990-P860-F49-PM	1200	35	IGBT4	

*flow*PACK 0B

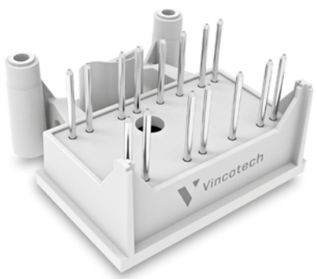

Facts

/ IGBT3 (600 V) and IGBT4 (1200 V) technology for low saturation losses
/ Open emitter topology
/ New ultra-compact housing with single-screw heat sink mounting

Housing

/ *flow* 0B 17 mm

www.vincotech.com/flowPACK-0B

Applications

/ INDUSTRIAL DRIVES / EMBEDDED DRIVES

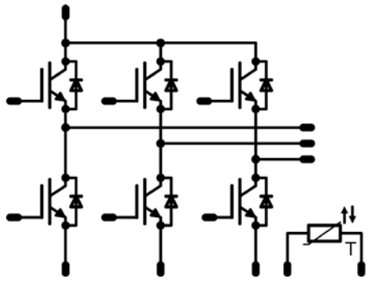

*flow*90PACK 1

Facts

/ IGBT3 (600 V) and IGBT4 (1200 V) technology for low saturation losses
/ Open emitter topology
/ Supports designs with 90° mounting angle
/ Clip-in PCB mounting
/ Clip or screw-on heat sink mounting

Housing

/ *flow*90 1

www.vincotech.com/flow90PACK-1

Applications

/ INDUSTRIAL DRIVES

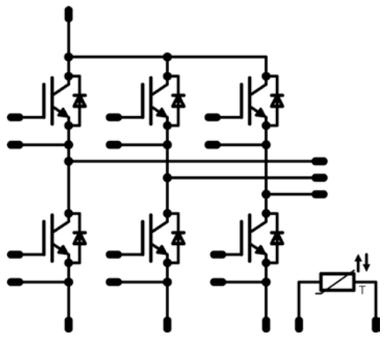

Part-No	Voltage [V]	Current [A]	Technology	Comments
10-0B066PA006SB-M992F09	600	6	IGBT3	
10-0B066PA010SB-M993F09	600	10	IGBT3	
10-0B066PA015SB-M994F09	600	15	IGBT3	
10-0B066PA020SB-M995F09	600	20	IGBT3	
10-0B066PA030SB-M996F09	600	30	IGBT3	
10-0B126PA004SC-M997F09	1200	4	IGBT4	
10-0B126PA008SC-M998F09	1200	8	IGBT4	
10-0B126PA015SC-M999F09	1200	15	IGBT4	

Part-No	Voltage [V]	Current [A]	Technology	Comments
V23990-P704-F-PM	600	30	IGBT3	
V23990-P705-F-PM	600	50	IGBT3	
V23990-P706-F-PM	600	75	IGBT3	
V23990-P707-F40-PM	1200	8	IGBT4	
V23990-P708-F40-PM	1200	15	IGBT4	
V23990-P709-F40-PM	1200	25	IGBT4	
V23990-P700-F40-PM	1200	35	IGBT4	
V23990-P700-F44-PM	1200	50	IGBT4	

*flow*PACK 1

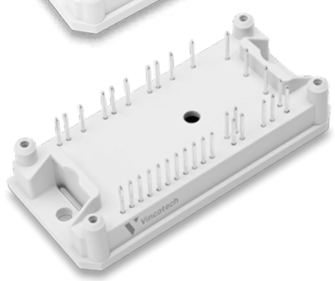

Facts

- IGBT3 (600 V) or IGBT4 (1200 V) technology for low conduction losses and improved EMC behavior
- Optionally with AlN DCB for improved R_{th}
- Compact design

Housing

- *flow* 1 12 mm (F08, F108)
- *flow* 1 17 mm (F10, F)

www.vincotech.com/flowPACK-1

Applications

/ INDUSTRIAL DRIVES / EMBEDDED DRIVES

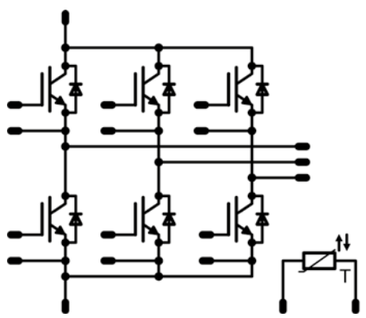

Part-No	Voltage (V)	Current (A)	Technology	Comments
V23990-P823-F10-PM	600	50	IGBT3	
V23990-P823-F-PM	600	50	IGBT3	improved Rth (AlN)
V23990-P824-F10-PM	600	75	IGBT3	
V23990-P824-F-PM	600	75	IGBT3	improved Rth (AlN)
V23990-P825-F10-PM	600	100	IGBT3	
V23990-P825-F-PM	600	100	IGBT3	improved Rth (AlN)
V23990-P828-F10-PM	1200	35	IGBT4	
V23990-P828-F-PM	1200	35	IGBT4	improved Rth (AlN)
V23990-P829-F10-PM	1200	50	IGBT4	
V23990-P829-F-PM	1200	50	IGBT4	improved Rth (AlN)
V23990-P829-F108-PM	1200	50	IGBT4	
V23990-P829-F08-PM	1200	50	IGBT4	improved Rth (AlN)
V23990-P820-F10-PM	1200	75	IGBT4	
V23990-P820-F-PM	1200	75	IGBT4	improved Rth (AlN)

*flow*PACK 2

Facts

- Latest chip technology for low conduction losses and improved EMC behavior
- Available with 1200 V IGBT4 and 1200 V Mitsubishi generation 6.1
- Compact and low inductive design
- Built-in NTC

Housing

- *flow* 2 17 mm

www.vincotech.com/flowPACK-2

Applications

/ INDUSTRIAL DRIVES

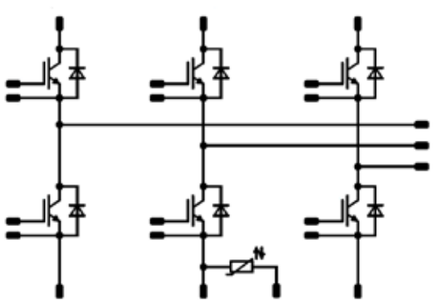

Part-No	Voltage (V)	Current (A)	Technology	Comments
30-P2126PA050NB-L287F69Y	1200	50	M6.1	
30-P2126PA050SC-L287F09Y	1200	50	IGBT4	
30-P2126PA075NB-L288F69Y	1200	75	M6.1	
30-P2126PA075SC-L288F09Y	1200	75	IGBT4	
30-P2126PA100NB-L289F69Y	1200	100	M6.1	
30-P2126PA100SC-L289F09Y	1200	100	IGBT4	
30-P2126PA150NB-L280F69Y	1200	150	M6.1	
30-P2126PA150SC-L280F09Y	1200	150	IGBT4	

MiniSKiiP® PACK 1

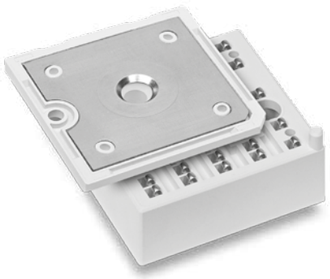

Facts

/ IGBT technology for low conduction and switching losses

/ Available with IGBT3 and IGBT4

/ Solderless spring contact mounting system

Housing

/ MiniSKiiP® 1

www.vincotech.com/MiniSKiiP-PACK-1

Applications

/ INDUSTRIAL DRIVES

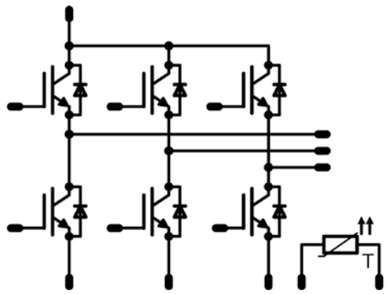

MiniSKiiP® PACK 2

Facts

/ IGBT technology for low conduction and switching losses

/ Available with IGBT3 and IGBT4

/ Solderless spring contact mounting system

/ Open emitter configuration available upon request

Housing

/ MiniSKiiP® 2

www.vincotech.com/MiniSKiiP-PACK-2

Applications

/ INDUSTRIAL DRIVES

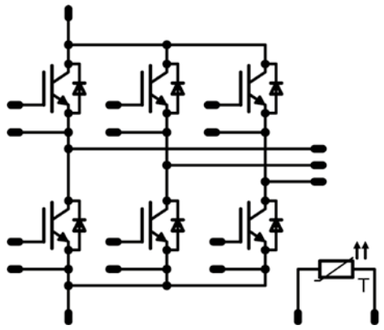

Part-No	Voltage [V]	Current [A]	Technology	Comments
V23990-K218-F-PM	1200	8	IGBT3	equivalent: SKiiP 11AC126V1
V23990-K218-F40-PM	1200	8	IGBT4	equivalent: SKiiP 11AC12T4V1
V23990-K219-F-PM	1200	15	IGBT3	equivalent: SKiiP 12AC126V1
V23990-K219-F40-PM	1200	15	IGBT4	equivalent: SKiiP 12AC12T4V1
V23990-K210-F-PM	1200	25	IGBT3	equivalent: SKiiP 13AC126V1
V23990-K210-F40-PM	1200	25	IGBT4	equivalent: SKiiP 13AC12T4V1

Part-No	Voltage [V]	Current [A]	Technology	Comments
V23990-K232-F-PM	600	50	IGBT3	equivalent: SKiiP 26AC066V1
V23990-K233-F-PM	600	75	IGBT3	equivalent: SKiiP 25AC126V1
V23990-K305-F-PM	600	100	IGBT3	equivalent: SKiiP 28AC066V1
V23990-K237-F40-PM	1200	25	IGBT4	equivalent: SKiiP 23AC12T4V1
V23990-K238-F40-PM	1200	35	IGBT4	equivalent: SKiiP 24AC12T4V1
V23990-K239-F40-PM	1200	50	IGBT4	equivalent: SKiiP 25AC12T4V1
V23990-K230-F40-PM	1200	70	IGBT4	equivalent: SKiiP 26AC12T4V1

MiniSKiiP® PACK 3

Facts

/ Latest chip technology for low conduction losses and improved EMC behavior

/ Available with 1200 V IGBT4 and 1200 V Mitsubishi generation 6.1

/ Solderless spring contact mounting system

Housing

/ MiniSKiiP® 3

www.vincotech.com/MiniSKiiP-PACK-3

Applications

/ INDUSTRIAL DRIVES

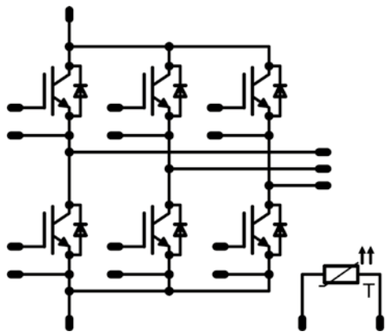

Part-No	Voltage [V]	Current [A]	Technology	Comments
V23990-K438-F40-PM	1200	75	IGBT4	equivalent: SKiiP 37AC12T4V1
V23990-K438-F60-PM	1200	75	M6.1	
V23990-K439-F40-PM	1200	100	IGBT4	equivalent: SKiiP 38AC12T4V1
V23990-K439-F60-PM	1200	100	M6.1	
V23990-K430-F40-PM	1200	150	IGBT4	equivalent: SKiiP 39AC12T4V1
V23990-K430-F60-PM	1200	150	M6.1	

*flow*PACK 1+R

Facts

- / Active frontend for power regeneration
- / IGBT3 (600 V) or IGBT4 (1200 V) technology for low conduction losses and improved EMC behavior
- / Integrated DC-link blocking diodes
- / Compact design

Housing

/ *flow* 1 12 mm

www.vincotech.com/flowPACK-1+R

Applications

/ INDUSTRIAL DRIVES

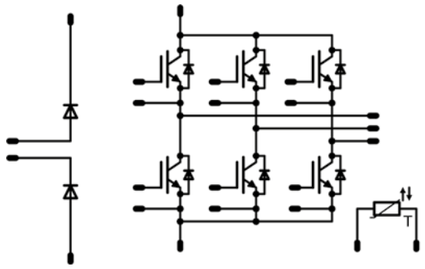

*flow*PACK 2+R

Facts

- / Active front end for power regeneration
- / IGBT3 (600 V) and IGBT4 (1200 V) technology for low saturation losses
- / Integrated blocking diodes for DC-Link
- / Compact design

Housing

/ *flow* 2 17 mm

www.vincotech.com/flowPACK-2+R

Applications

/ INDUSTRIAL DRIVES

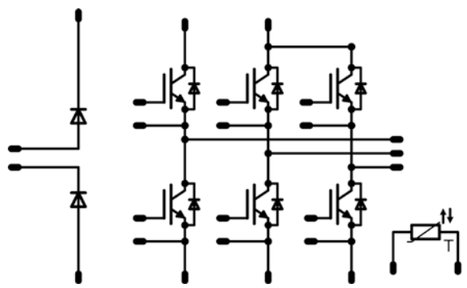

Part-No	Voltage [V]	Current [A]	Technology	Comments
10-F106R6A030SB-M434E08	600	30	IGBT3	
10-F106R6A030SB01-M434E18	600	30	IGBT3	w/o NTC
10-F106R6A050SB-M435E08	600	50	IGBT3	
10-F106R6A050SB01-M435E18	600	50	IGBT3	w/o NTC
10-F112R6A015SC-M438E08	1200	15	IGBT4	
10-F112R6A015SC01-M438E18	1200	15	IGBT4	w/o NTC
10-F112R6A035SC-M439E08	1200	35	IGBT4	
10-F112R6A035SC01-M439E18	1200	35	IGBT4	w/o NTC
10-F112R6A050SC-M430E08	1200	50	IGBT4	
10-F112R6A050SC01-M430E18	1200	50	IGBT4	w/o NTC

Part-No	Voltage [V]	Current [A]	Technology	Comments
30-F206R6A050SB-M442E	600	50	IGBT3	
30-F206R6A050SB01-M442E10	600	50	IGBT3	w/o NTC
30-F206R6A075SB-M443E	600	75	IGBT3	
30-F206R6A075SB-M443E10	600	75	IGBT3	w/o NTC
30-F206R6A100SB-M444E	600	100	IGBT3	
30-F206R6A100SB01-M444E10	600	100	IGBT3	w/o NTC
30-F206R6A150SB-M445E	600	150	IGBT3	
30-F206R6A150SB01-M445E10	600	150	IGBT3	w/o NTC
30-F212R6A050SC-M447E	1200	50	IGBT4	
30-F212R6A050SC01-M447E10	1200	50	IGBT4	w/o NTC
30-F212R6A075SC-M448E	1200	75	IGBT4	
30-F212R6A075SC01-M448E10	1200	75	IGBT4	w/o NTC
30-F212R6A100SC-M449E	1200	100	IGBT4	
30-F212R6A100SC01-M449E10	1200	100	IGBT4	w/o NTC
30-F212R6A150SC-M440E	1200	150	IGBT4	
30-F212R6A150SC01-M440E10	1200	150	IGBT4	w/o NTC

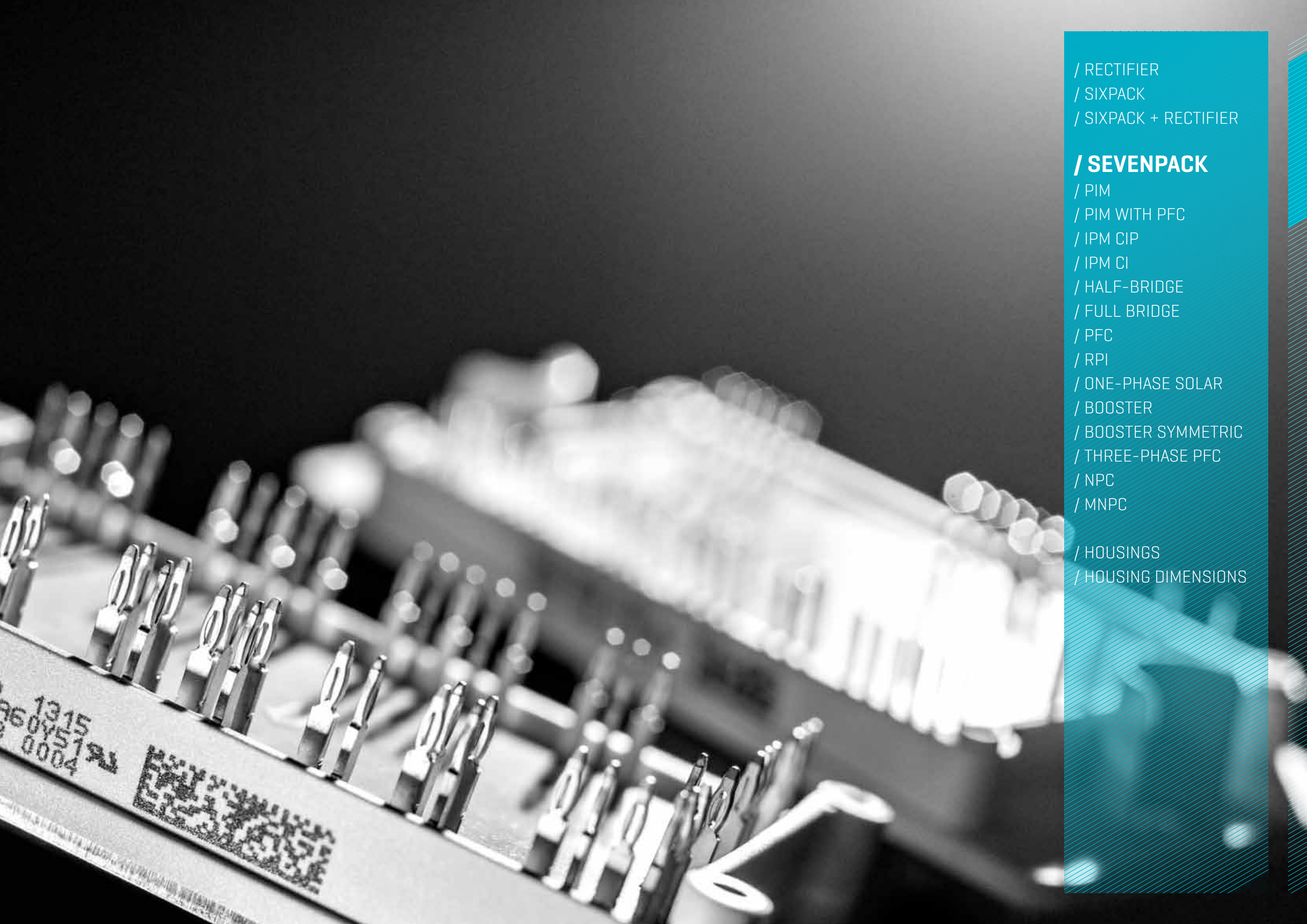

*flow*7PACK 0

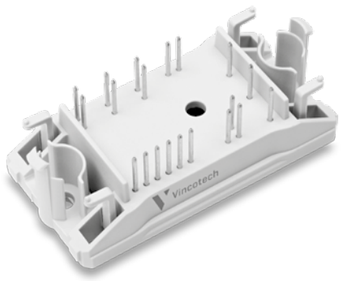

Facts

- Sixpack with brake
- IGBT4 (1200 V) technology for low conduction losses
- Compact and low inductance design
- Built-in NTC

Housing

- *flow* 0 17 mm

www.vincotech.com/flow7PACK-0

Applications

- INDUSTRIAL DRIVES

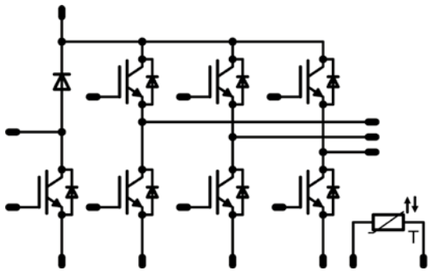

*flow*7PACK 1

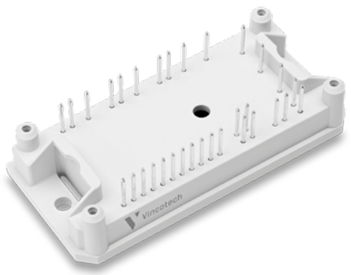

Facts

- Sixpack with brake
- IGBT4 (1200 V) technology for low conduction losses
- Compact and low inductance design
- Built-in NTC

Housing

- *flow* 1 17 mm

www.vincotech.com/flow7PACK-1

Applications

- INDUSTRIAL DRIVES

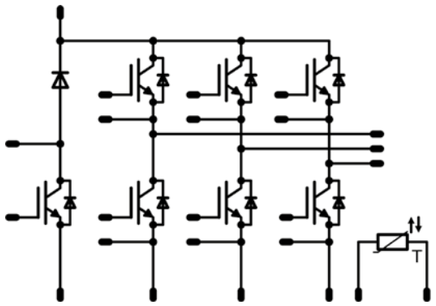

Part-No	Voltage [V]	Current [A]	Technology	Comments
10-F0127PA008SC-L156E09	1200	8	IGBT4	
10-F0127PA015SC-L158E09	1200	15	IGBT4	
10-F0127PA025SC-L159E09	1200	25	IGBT4	

Part-No	Voltage [V]	Current [A]	Technology	Comments
10-F1127PA025SC-L167E09	1200	25	IGBT4	
10-F1127PA035SC-L168E09	1200	35	IGBT4	
10-F1127PA050SC-L169E09	1200	50	IGBT4	

*flow*7PACK 2

Facts

- Sixpack with brake
- IGBT4 (1200 V) technology for low conduction losses
- Compact and low inductance design
- Built-in NTC

Housing

- *flow* 2 17 mm

www.vincotech.com/flow7PACK-2

Applications

- INDUSTRIAL DRIVES

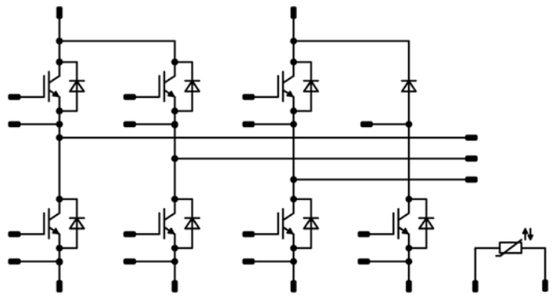

Part-No	Voltage [V]	Current [A]	Technology	Comments
30-F2127PA050SC-L177E09	1200	50	IGBT4	
30-F2127PA075SC-L178E09	1200	75	IGBT4	
30-F2127PA100SC-L179E09	1200	100	IGBT4	

*flow*PIM® 0

Facts

- / IGBT3 (600 V) and IGBT4 (1200 V) technology for low conduction and switching losses
- / Compact and low inductive design
- / Optionally with enhanced rectifier, w/o brake, single-phase applications

Available options

- / w/o brake (C2x for 600 V, C4x for 1200 V)
- / enhanced rectifier (A3x for 600 V, A5x for 1200 V)
- / enhanced rectifier w/o brake (C3x for 600 V, C5 for 1200 V)
- / Single-phase applications

Housing

- / *flow* 0 12 mm (xx8)
- / *flow* 0 17 mm (xx9)

www.vincotech.com/flowPIM-0

Applications

/ INDUSTRIAL DRIVES / EMBEDDED DRIVES

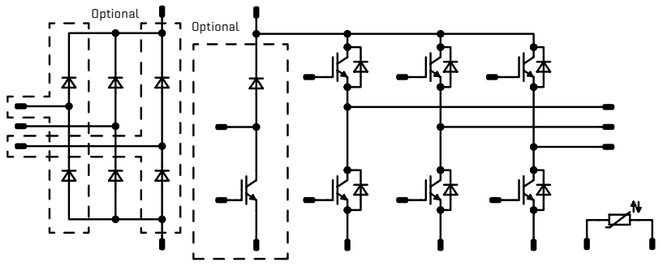

Part-No	Voltage (V)	Current (A)	Technology	Comments
V23990-P541-A28-PM	600	6	IGBT3	standard configuration with brake
V23990-P543-A28-PM	600	10	IGBT3	standard configuration with brake
V23990-P544-A28-PM	600	15	IGBT3	standard configuration with brake
V23990-P545-A28-PM	600	20	IGBT3	standard configuration with brake
V23990-P546-A28-PM	600	30	IGBT3	standard configuration with brake
V23990-P848-A48-PM	1200	4	IGBT4	standard configuration with brake
V23990-P849-A48-PM	1200	8	IGBT4	standard configuration with brake
V23990-P840-A48-PM	1200	15	IGBT4	standard configuration with brake

*flow*PIM® 1

Facts

- / IGBT3 (600 V) and IGBT4 (1200 V) technology for low conduction and switching losses
- / Compact and low inductive design
- / Optionally w/o brake and with AlN DCB for improved R_{th}

Available options

- / w/o brake (Cxx)

Housing

- / *flow* 1 12 mm (x208, x418)
- / *flow* 1 17 mm (x20, x41)

www.vincotech.com/flowPIM-1

Applications

/ INDUSTRIAL DRIVES / EMBEDDED DRIVES

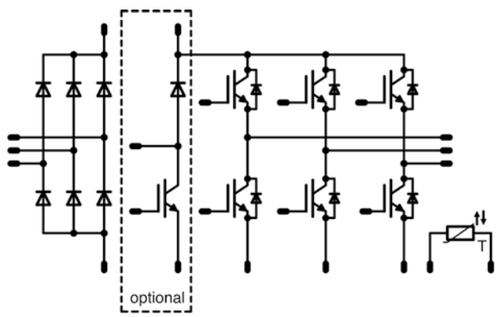

Part-No	Voltage (V)	Current (A)	Technology	Comments
V23990-P585-A208-PM	600	30	IGBT3	standard configuration with brake
V23990-P586-A208-PM	600	50	IGBT3	standard configuration with brake
V23990-P587-A208-PM	600	75	IGBT3	standard configuration with brake
V23990-P588-A418-PM	1200	15	IGBT4	standard configuration with brake
V23990-P589-A418-PM	1200	25	IGBT4	standard configuration with brake
V23990-P580-A418-PM	1200	35	IGBT4	standard configuration with brake
V23990-P580-A46-PM	1200	35	IGBT4	with brake, improved Rth (AlN)

*flow*90PIM 1

Facts

- / IGBT technology for low conduction losses and improved EMC behavior
- / Supports design with 90° angle
- / Clip-in PCB mounting
- / Clip or screw-on heat sink mounting

Housing

/ *flow*90 1

www.vincotech.com/flow90PIM-1

Applications

/ INDUSTRIAL DRIVES / EMBEDDED DRIVES

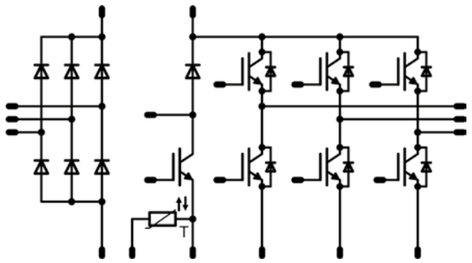

Part-No	Voltage [V]	Current [A]	Technology	Comments
V23990-P631-A-PM	600	6	IGBT3	
V23990-P632-A-PM	600	10	IGBT3	
V23990-P633-A-PM	600	15	IGBT3	
V23990-P634-A-PM	600	20	IGBT3	
V23990-P635-A-PM	600	30	IGBT3	
V23990-P638-A40-PM	1200	4	IGBT4	
V23990-P639-A40-PM	1200	8	IGBT4	
V23990-P630-A40-PM	1200	15	IGBT4	
V23990-P630-A44-PM	1200	25	IGBT4	

*flow*PIM® 2

Facts

- / Latest chip technology for low conduction losses and improved EMC behavior
- / Available with 600 V IGBT3, 1200 V IGBT4 and 1200 V Mitsubishi generation 6.1
- / Compact and low inductive design

Housing

/ *flow* 2 17 mm

www.vincotech.com/flowPIM-2

Applications

/ INDUSTRIAL DRIVES

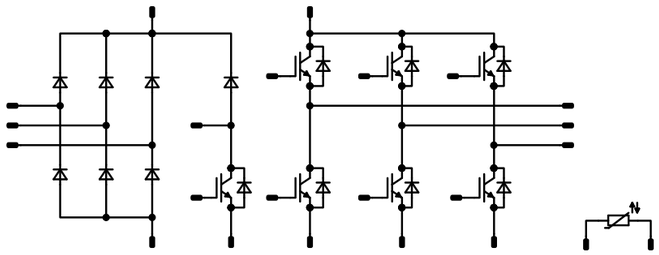

Part-No	Voltage [V]	Current [A]	Technology	Comments
V23990-P763-A-PM	600	50	IGBT3	
V23990-P764-A-PM	600	75	IGBT3	
V23990-P765-A-PM	600	100	IGBT3	
V23990-P767-A-PM	1200	35	IGBT4	
V23990-P768-A-PM	1200	50	IGBT4	
V23990-P768-A60-PM	1200	50	M6.1	
V23990-P769-A-PM	1200	75	IGBT4	
V23990-P769-A60-PM	1200	75	M6.1	
V23990-P760-A-PM	1200	100	IGBT4	
V23990-P760-A60-PM	1200	100	M6.1	

MiniSKiiP® PIM 0

Facts

/ IGBT3 (600 V) and IGBT4 (1200 V) technology for low conduction losses

/ Optinal with single-phase rectifier (600 V) K61xD

/ Solderless spring contact mounting system

Housing

/ MiniSKiiP® 0

www.vincotech.com/MiniSKiiP-PIM-0

Applications

/ INDUSTRIAL DRIVES

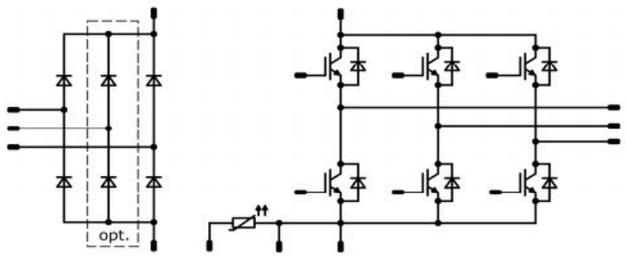

Part-No	Voltage [V]	Current [A]	Technology	Comments
80-M006PNB006SA-K614C	600	6	IGBT3	equivalent: SKiiP 01NxC066V3
80-M006PNB010SA-K615C	600	10	IGBT3	equivalent: SKiiP 02NxC066V3
80-M006PNB006SA01-K614D	600	6	IGBT3	equivalent: SKiiP 01NxC066V3
80-M006PNB010SA01-K615D	600	10	IGBT3	equivalent: SKiiP 02NxC066V3
80-M012PNB008SC-K619C41	1200	8	IGBT4	equivalent: SKiiP 03NAC12T4V1

MiniSKiiP® PIM 1

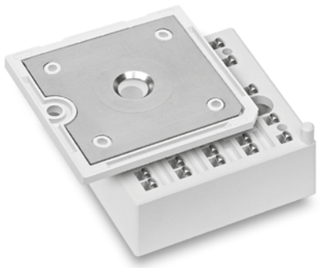

Facts

/ IGBT3 (600 V) and IGBT4 (1200 V) technology for low conduction losses

/ Solderless spring contact mounting system

Housing

/ MiniSKiiP® 1

www.vincotech.com/MiniSKiiP-PIM-1

Applications

/ INDUSTRIAL DRIVES

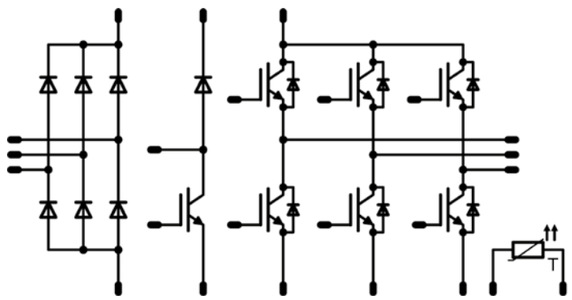

Part-No	Voltage [V]	Current [A]	Technology	Comments
V23990-K201-A-PM	600	6	IGBT3	equivalent: SKiiP 11NAB066V1
V23990-K202-A-PM	600	10	IGBT3	equivalent: SKiiP 12NAB066V1
V23990-K203-A-PM	600	15	IGBT3	equivalent: SKiiP 13NAB066V1
V23990-K204-A-PM	600	20	IGBT3	equivalent: SKiiP 14NAB066V1
V23990-K209-A40-PM	1200	8	IGBT4	equivalent: SKiiP 11NAB12T4V1
V23990-K200-A40-PM	1200	15	IGBT4	equivalent: SKiiP 12NAB12T4V1

MiniSKiiP® PIM 2

Facts

/ IGBT3 (600 V) and IGBT4 (1200 V) technology for low conduction losses

/ Solder-less spring contact mounting system

Housing

/ MiniSKiiP® 2

www.vincotech.com/MiniSKiiP-PIM-2

Applications

/ INDUSTRIAL DRIVES

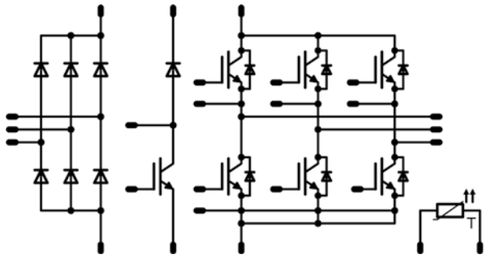

MiniSKiiP® PIM 3

Facts

/ Latest chip technology for low conduction losses and improved EMC behavior

/ Available with 600 V IGBT3, 1200 V IGBT4 and 1200 V Mitsubishi generation 6.1

/ Solder-less spring contact mounting system

Housing

/ MiniSKiiP® 3

www.vincotech.com/MiniSKiiP-PIM-3

Applications

/ INDUSTRIAL DRIVES

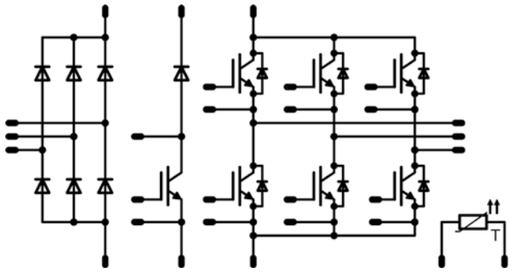

Part-No	Voltage [V]	Current [A]	Technology	Comments
V23990-K222-A-PM	600	30	IGBT3	equivalent: SKiiP 25NAB066V1
V23990-K223-A-PM	600	50	IGBT3	equivalent: SKiiP 26NAB066V1
V23990-K229-A40-PM	1200	25	IGBT4	equivalent: SKiiP 23NAB12T4V1
V23990-K229-A41-PM	1200	25	IGBT4	equivalent: SKiiP 23NAB12T4V10 enhanced rectifier
V23990-K220-A40-PM	1200	35	IGBT4	equivalent: SKiiP 24NAB12T4V1
V23990-K220 A41-PM	1200	35	IGBT4	equivalent: SKiiP 24NAB12T4V10; enhanced rectifier

Part-No	Voltage [V]	Current [A]	Technology	Comments
V23990-K242-A-PM	600	75	IGBT3	equivalent: SKiiP 37NAB066V1
V23990-K243-A-PM	600	100	IGBT3	equivalent: SKiiP 38NAB066V1
V23990-K427-A40-PM	1200	35	IGBT4	equivalent: SKiiP 34NAB12T4V1
V23990-K428-A40-PM	1200	50	IGBT4	equivalent: SKiiP 35NAB12T4V1
V23990-K428-A60-PM	1200	50	M6.1	
V23990-K429-A40-PM	1200	75	IGBT4	equivalent: SKiiP 37NAB12T4V1
V23990-K429-A60-PM	1200	75	M6.1	
V23990-K420-A40-PM	1200	100	IGBT4	equivalent: SKiiP 38NAB12T4V1
V23990-K420-A60-PM	1200	100	M6.1	

*flow*PIM® 0B + PFC

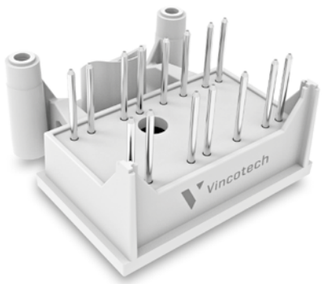

Facts

/ High-speed IGBT PFC boost circuit
/ PFC switching frequencies up to 150 kHz
/ Open emitter topology
/ New ultra-compact housing
/ Single-screw heat sink mounting
/ Temperature sensor

Housing

/ *flow* 0B

www.vincotech.com/flowPIM-0B+PFC

Applications

/ INDUSTRIAL DRIVES / EMBEDDED DRIVES

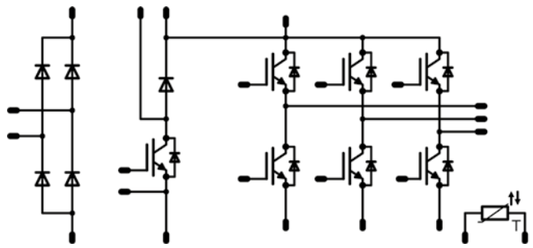

*flow*PIM® 0 + PFC

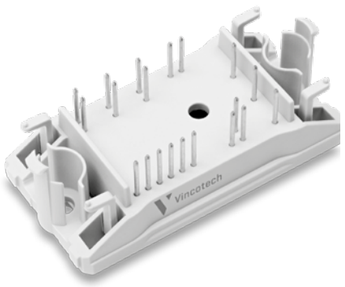

Facts

/ PIM modules with PFC
/ PFC boost circuit with MOSFET
/ PFC switching frequency up to 200 kHz
/ Integrated shunt resistor
/ Inverter part with IGBT3 technology
/ Open emitter configuration
/ Clip-in PCB mounting
/ Temperature sensor

Housing

/ *flow* 0 17 mm

www.vincotech.com/flowPIM-0+PFC

Applications

/ INDUSTRIAL DRIVES / EMBEDDED DRIVES

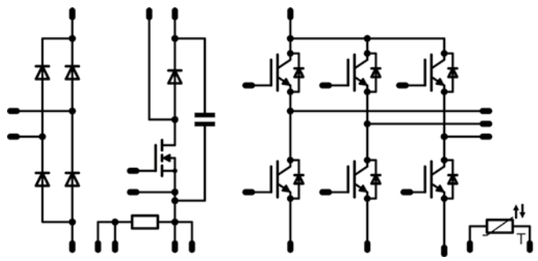

Part-No	Voltage [V]	Current [A]	Technology	Comments
10-0B06PPA004RC-L022A09	600	4	RC IGBT	PFC: H5 IGBT+ Si diode (up to 100 kHz)
10-0B06PPA006RC-L023A09	600	6	RC IGBT	PFC: H5 IGBT+ Si diode (up to 100 kHz)
10-0B06PPA010RC-L025A09	600	10	RC IGBT	PFC: H5 IGBT+ Si diode (up to 100 kHz)
10-0B06PPA010RC01-L025A19	600	10	RC IGBT	PFC: F5 IGBT + SiC diode (up to 150 kHz)

Part-No	Voltage [V]	Current [A]	Technology	Comments
10-F006PPA006SB-M682B	600	6	IGBT3	
10-F006PPA010SB-M683B	600	10	IGBT3	
10-F006PPA015SB-M684B	600	15	IGBT3	
10-F006PPA020SB-M685B	600	20	IGBT3	
10-F006PPA020SB01-M685B10	600	20	IGBT3	SiC PFC diode

*flow*90PIM 1 + PFC

Facts

/ PIM modules with MOSFET (CoolMOS™)
/ PFC boost circuit
/ PFC switching frequency up to 200 kHz
/ Inverter part with IGBT3 technology
/ Open emitter configuration
/ Clip-in PCB mounting
/ Supports design with 90° angle

Housing

/ *flow*90 1

www.vincotech.com/flow90PIM-1+PFC

Applications

/ **INDUSTRIAL DRIVES** / **EMBEDDED DRIVES**

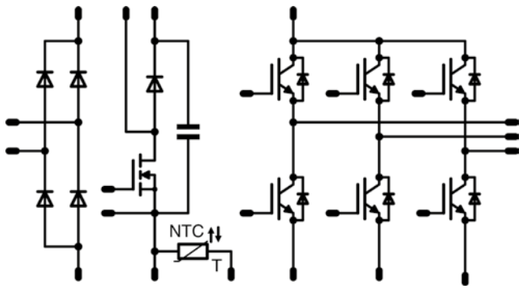

Part-No	Voltage [V]	Current [A]	Technology	Comments
10-R10GPPA020SB01-M934A	600	20	MOSFET	

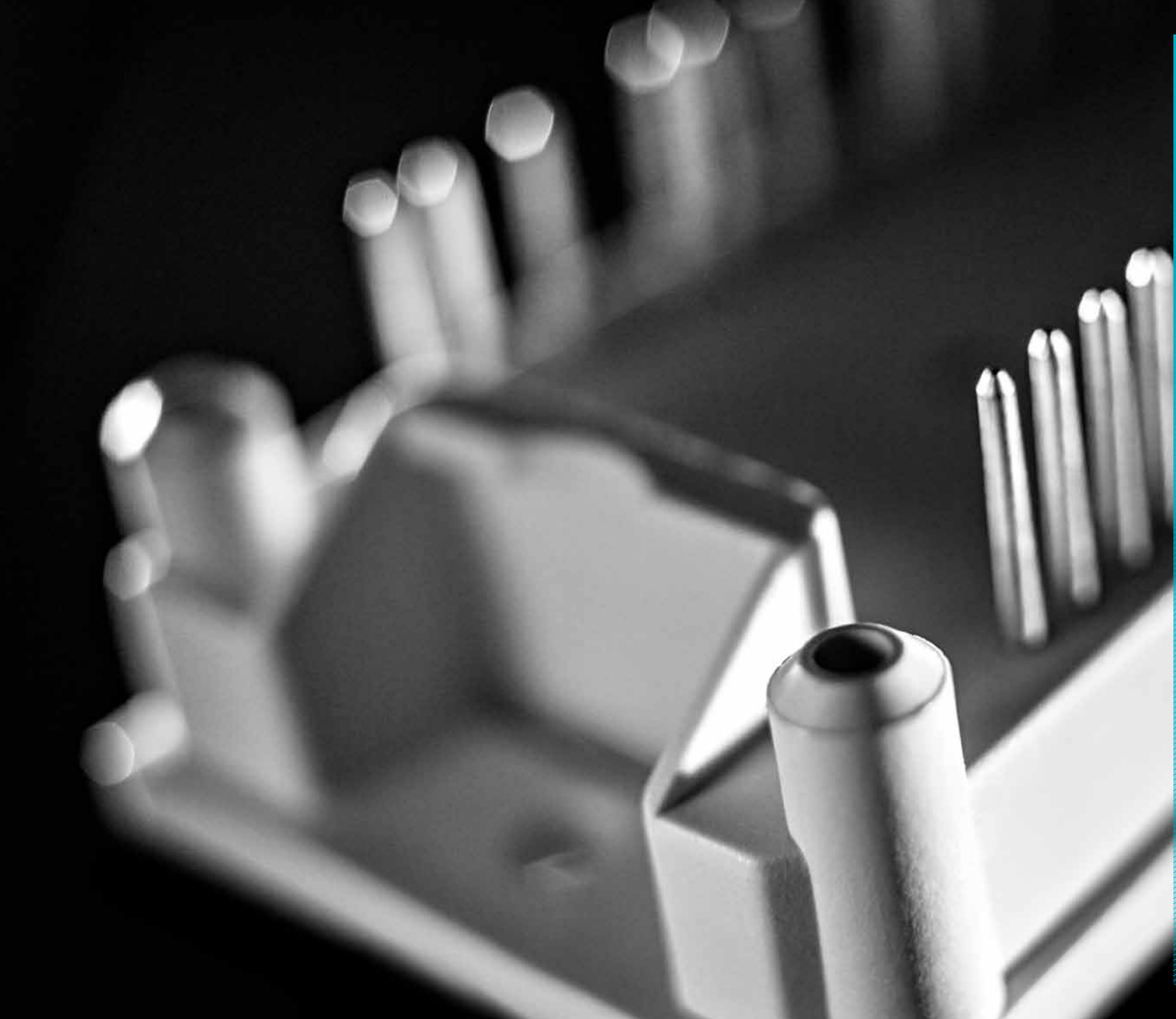

*flow*IPM 1B (CIP)

Facts

- / Rectifier, PFC, three-phase inverter
- / Integrated DC capacitor
- / Laser trimmed shunts for current measurement
- / Complete gate drive circuit (incl. bootstrap)
- / Optional integrated PFC controller
- / Temperature sensor

Housing

/ *flow* 1B

www.vincotech.com/flowIPM-1B-CIP

Applications

/ INDUSTRIAL DRIVES / EMBEDDED DRIVES

/ P95x / Gate Driver

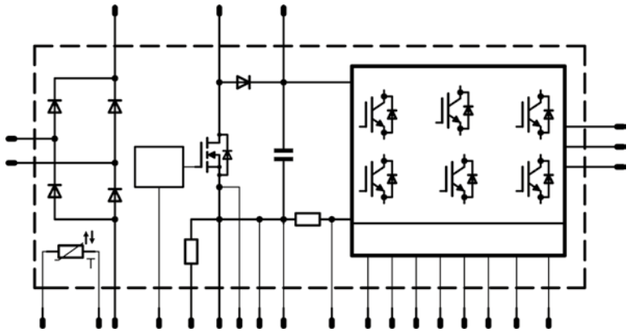

Part-No	Voltage [V]	Current [A]	Technology	Comments
20-1B06IPB004RC-P952A40	600	4	RC IGBT	Integrated PFC controller
20-1B06IPB004RC01-P952A45	600	4	RC IGBT	
20-1B06IPB006RC01-P953A45	600	6	RC IGBT	
20-1B06IPB010RC-P955A40	600	10	RC IGBT	Integrated PFC controller
20-1B06IPB010RC01-P955A45	600	10	RC IGBT	

*flow*IPM 1B (CI)

NEW

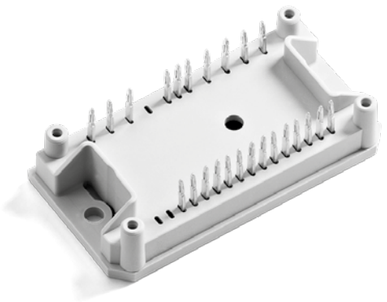

Facts

/ Three-phase input rectifier and three-phase inverter

/ Laser trimmed shunt resistors in all three low side emitters

/ Three complete gate drive circuits (incl. bootstrap)

/ Temperature sensor

Housing

/ *flow* 1B

www.vincotech.com/flowIPM-1B-CI

Applications

/ INDUSTRIAL DRIVES / EMBEDDED DRIVES

/ L23x

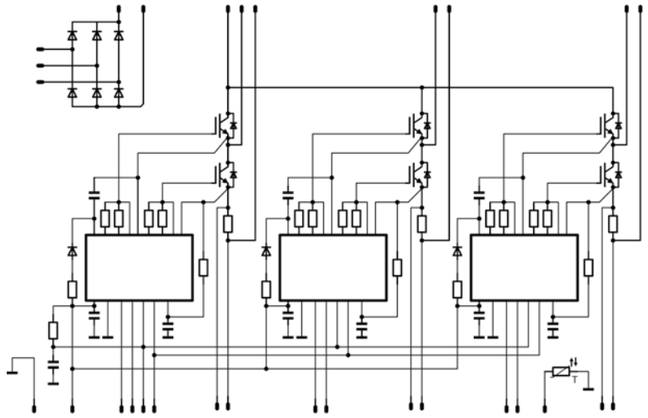

Part-No	Voltage [V]	Current [A]	Technology	Comments
20-1B12IPA008SC-L239C09	1200	8	IGBT4	
20-FB12IPA008SC-L239C08Y	1200	8	IGBT4	Press-fit
20-1B12IPA015SC-L579F09	1200	15	IGBT4	w/o rectifier

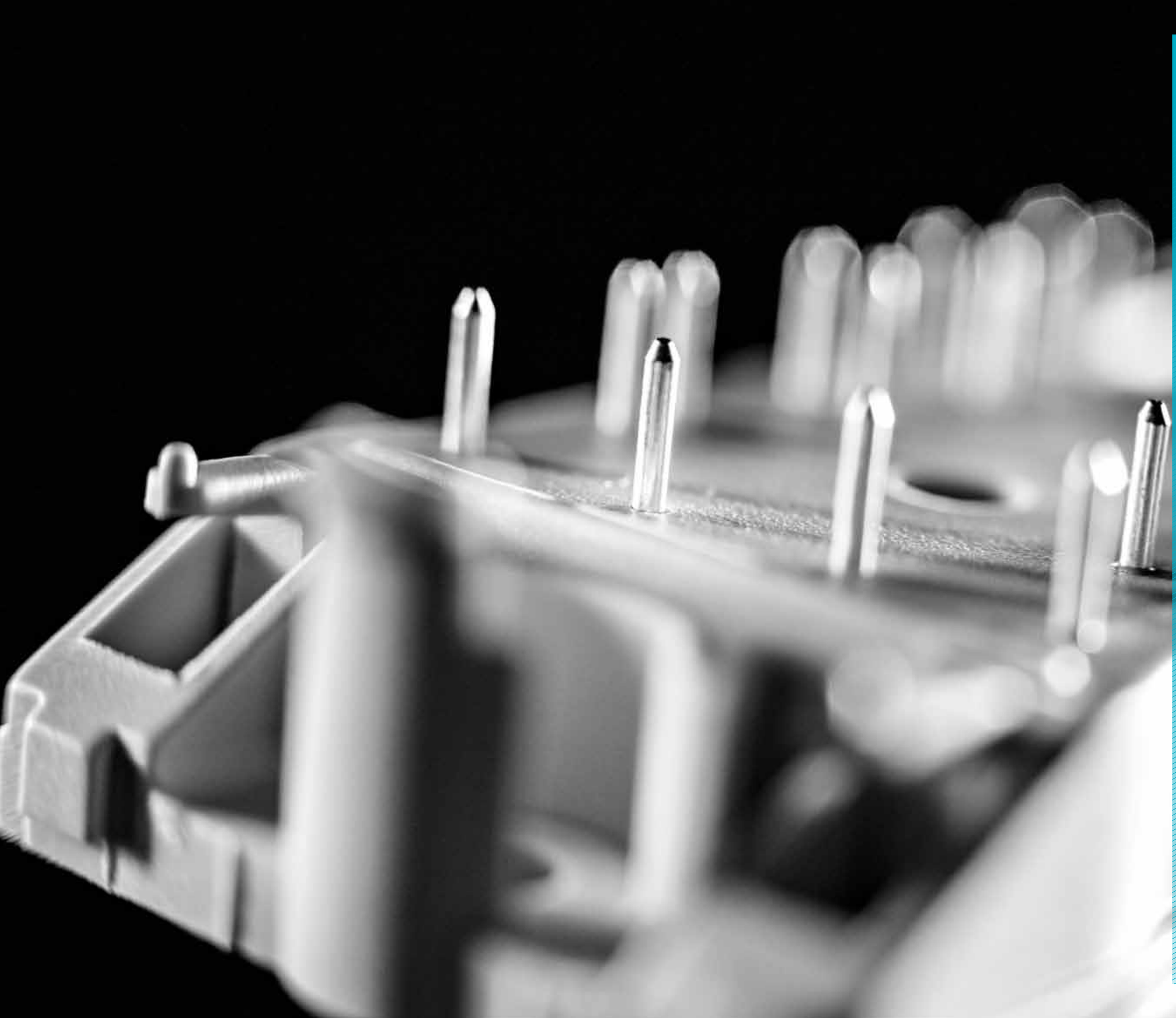

*flow*PHASE 0

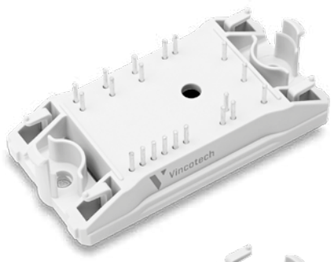

Facts

- / IGBT4 (1200 V) technology for low conduction losses and improved EMC behavior
- / IGBT3 (600 V) technology for low conduction losses
- / Clip-in PCB mounting

Housing

- / *flow* 0 17 mm (xx9)
- / *flow* 0 12 mm (xx8)

www.vincotech.com/flowPHASE-0

Applications

/ INDUSTRIAL DRIVES
/ POWER SUPPLY / SOLAR INVERTERS
/ UPS / WELDING

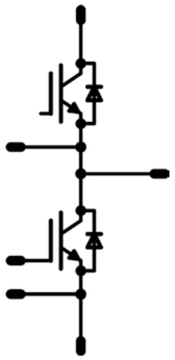

Part-No	Voltage [V]	Current [A]	Technology	Comments
10-F0062PA075SA-P993F09	600	75	IGBT3	
10-FZ062PA075SA-P993F08	600	75	IGBT3	
10-F0062PA075SA01-P993F19	600	75	IGBT3	improved Rth (AlN)
10-FZ062PA075SA01-P993F18	600	75	IGBT3	improved Rth (AlN)
10-F0062PA100SA01-P994F19	600	100	IGBT3	improved Rth (AlN)
10-FZ062PA100SA-P994F08	600	100	IGBT3	
10-FZ062PA150SA-P995F08	600	150	IGBT3	
10-F0062PA150SA01-P995F19	600	150	IGBT3	improved Rth (AlN)
10-FZ062PA150SA01-P995F18	600	150	IGBT3	improved Rth (AlN)
10-F0062PA200SA01-P996F19	600	200	IGBT3	improved Rth (AlN)
10-FZ062PA200SA01-P996F18	600	200	IGBT3	improved Rth (AlN)
10-F0062PA200SA-P996F09	600	200	IGBT3	
10-FZ062PA200SA-P996F08	600	200	IGBT3	
10-F0122PA050SC01-P997F19	1200	50	IGBT4	improved Rth (AlN)
10-FZ122PA050SC01-P997F18	1200	50	IGBT4	improved Rth (AlN)
10-FZ122PA050SC-P997F08	1200	50	IGBT4	
10-F0122PA075SC01-P998F19	1200	75	IGBT4	improved Rth (AlN)
10-FZ122PA075SC01-P998F18	1200	75	IGBT4	improved Rth (AlN)
10-F0122PA075SC-P998F09	1200	75	IGBT4	
10-FZ122PA075SC-P998F08	1200	75	IGBT4	
10-F0122PA100FC01-P999F59	1200	100	IGBT2 HS	improved Rth (AlN)
10-FZ122PA100FC01-P999F58	1200	100	IGBT2 HS	improved Rth (AlN)
10-FZ122PA100SC02-P999F78	1200	100	IGBT4 HS	
10-F0122PA100SC01-P999F19	1200	100	IGBT4	improved Rth (AlN)
10-FZ122PA100SC01-P999F18	1200	100	IGBT4	improved Rth (AlN)
10-F0122PA100SC-P999F09	1200	100	IGBT4	
10-FZ122PA100SC-P999F08	1200	100	IGBT4	
10-F0122PA150SC-P990F09	1200	150	IGBT4	
10-FZ122PA150SC-P990F08	1200	150	IGBT4	
10-F0122PA150SC01-P990F19	1200	150	IGBT4	improved Rth (AlN)
10-FZ122PA150SC01-P990F18	1200	150	IGBT4	improved Rth (AlN)

*flow*PHASE 0 + NTC

NEW

Facts

- High-voltage, half-bridge topology
- High-speed switching up to 50 kHz
- High power density
- Ultra-low conduction and switching losses
- Best-in-class R_{th} with AlN DCB

Housing

- *flow* 0 12 mm

www.vincotech.com/flowPHASE-0

Applications

/ INDUSTRIAL DRIVES
/ POWER SUPPLY / SOLAR INVERTERS
/ UPS / WELDING

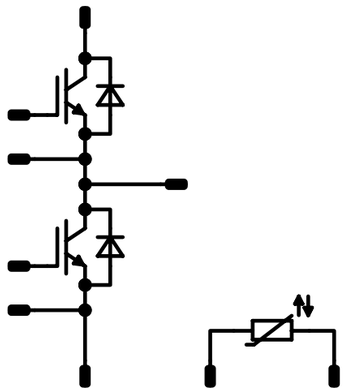

Part-No	Voltage [V]	Current [A]	Technology	Comments
10-FZ072PB120SM03-M815F03	650	120	IGBT H5	fsw > 30kHz
10-FZ122PB040FV-M817F88	1200	40	IGBTF HS	Solder pins
10-PZ122PB040FV-M817F88Y	1200	40	IGBTF HS	Press-fit
10-FZ122PB040FV01-M817F98	1200	40	IGBTF HS	Solder pins; AlN DCB
10-PZ122PB040FV01-M817F98Y	1200	40	IGBTF HS	Press-fit; AlN DCB
10-F0122PB050SC02-M817F09	1200	50	IGBT4	Solder pins
10-FZ122PB050SC02-M817F08	1200	50	IGBT4	Solder pins
10-P0122PB050SC02-M817F09Y	1200	50	IGBT4	Press-fit
10-PZ122PB050SC02-M817F08Y	1200	50	IGBT4	Press-fit
10-F0122PB050SC03-M817F19	1200	50	IGBT4	Solder pins; AlN DCB
10-FZ122PB050SC03-M817F18	1200	50	IGBT4	Solder pins; AlN DCB
10-P0122PB050SC03-M817F19Y	1200	50	IGBT4	Press-fit; AlN DCB
10-PZ122PB050SC03-M817F18Y	1200	50	IGBT4	Press-fit; AlN DCB
10-FZ122PB050SH-M817F28	1200	50	IGBT4 HS	Solder pins
10-PZ122PB050SH-M817F28Y	1200	50	IGBT4 HS	Press-fit
10-FZ122PB050SH01-M817F38	1200	50	IGBT4 HS	Solder pins; AlN DCB
10-PZ122PB050SH01-M817F38Y	1200	50	IGBT4 HS	Press-fit; AlN DCB
10-F0122PB075SC02-M818F09	1200	75	IGBT4	Solder pins
10-FZ122PB075SC-M818F08	1200	75	IGBT4	Solder pins
10-P0122PB075SC02-M818F09Y	1200	75	IGBT4	Press-fit
10-PZ122PB075SC02-M818F08Y	1200	75	IGBT4	Press-fit
10-F0122PB075SC03-M818F19	1200	75	IGBT4	Solder pins; AlN DCB
10-FZ122PB075SC03-M818F18	1200	75	IGBT4	Solder pins; AlN DCB
10-P0122PB075SC03-M818F19Y	1200	75	IGBT4	Press-fit; AlN DCB
10-PZ122PB075SC03-M818F18Y	1200	75	IGBT4	Press-fit; AlN DCB
10-FZ122PB075SH-M818F28	1200	75	IGBT4 HS	Solder pins
10-PZ122PB075SH-M818F28Y	1200	75	IGBT4 HS	Press-fit
10-FZ122PB080FV-M818F88	1200	80	IGBTF HS	Solder pins
10-PZ122PB080FV-M818F88Y	1200	80	IGBTF HS	Press-fit
10-FZ122PB080FV01-M818F98	1200	80	IGBTF HS	Solder pin; AlN DCB
10-PZ122PB080FV01-M818F98Y	1200	80	IGBTF HS	Press-fit; AlN DCB
10-F0122PB100SC02-M819F09	1200	100	IGBT4	Solder pins
10-FZ122PB100SC02-M819F08	1200	100	IGBT4	Solder pins
10-P0122PB100SC02-M819F09Y	1200	100	IGBT4	Press-fit
10-PZ122PB100SC02-M819F08Y	1200	100	IGBT4	Press-fit
10-F0122PB100SC03-M819F19	1200	100	IGBT4	Solder pins; AlN DCB
10-FZ122PB100SC03-M819F18	1200	100	IGBT4	Solder pins; AlN DCB
10-P0122PB100SC03-M819F19Y	1200	100	IGBT4	Press-fit; AlN DCB
10-PZ122PB100SC03-M819F18Y	1200	100	IGBT4	Press-fit; AlN DCB
10-FZ122PB075SH01-M818F38	1200	100	IGBT4 HS	Solder pins; AlN DCB
10-PZ122PB075SH01-M818F38Y	1200	100	IGBT4 HS	Press-fit; AlN DCB
10-FZ122PB100SH01-M819F38	1200	100	IGBT4 HS	Solder pins; AlN DCB
10-PZ122PB100SH01-M819F38Y	1200	100	IGBT4 HS	Press-fit; AlN DCB
10-FZ122PB100SH-M819F28	1200	100	IGBT4 HS	Solder pins
10-PZ122PB100SH-M819F28Y	1200	100	IGBT4 HS	Press-fit

MiniSkiiP® DUAL 2

Facts

- 1200 V Trench IGBT4, 650 V Trench with anti-parallel CAL-diodes
- Standard MiniSKiiP® package sizes for modern inverter designs up to 90 kW motor power
- Solder-less spring contact mounting system
- Integrated NTC temperature sensor

Housing

- MiniSKiiP® 2

www.vincotech.com/MiniSKiiPDUAL-2

Applications

/ INDUSTRIAL DRIVES
/ POWER SUPPLY / SOLAR INVERTERS
/ UPS / WELDING

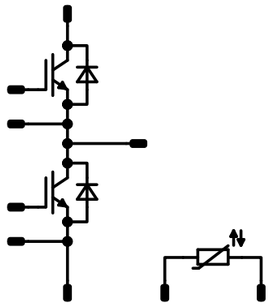

MiniSkiiP® DUAL 3

Facts

- 1200 V Trench IGBT4, 650 V Trench IGBTs with anti-parallel CAL-diodes
- Standard MiniSKiiP® package sizes for modern inverter designs up to 90 kW motor power
- Solder-less spring contact mounting system
- Integrated NTC temperature sensor

Housing

- MiniSKiiP® 3

www.vincotech.com/MiniSKiiPDUAL-3

Applications

/ INDUSTRIAL DRIVES
/ POWER SUPPLY / SOLAR INVERTERS
/ UPS / WELDING

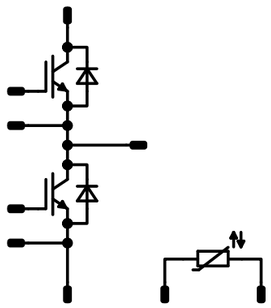

Part-No	Voltage [V]	Current [A]	Technology	Comments
80-M2072PA150SC-K704F40	650	150	IGBT3	
80-M2072PA200SC-K705F40	650	200	IGBT3	
80-M2122PA150SC-K708F40	1200	150	IGBT4	
80-M2122PA200SC-K709F40	1200	200	IGBT4	

Part-No	Voltage [V]	Current [A]	Technology	Comments
80-M3072PA300SC-K836F30	650	300	IGBT3	
80-M3122PA300SC-K839F42	1200	300	IGBT4	
80-M3122PA400SC-K830F40	1200	400	IGBT4	

*fast*PACK 0 H

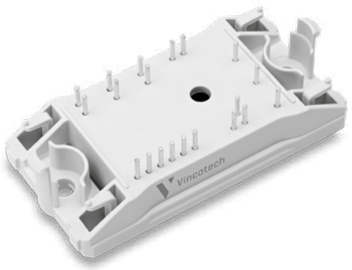

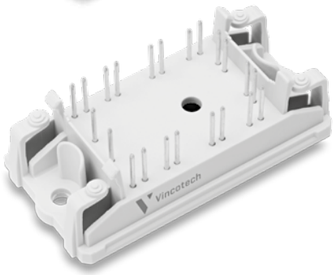

Facts

- High efficient H-bridge
- High-speed IGBT
- Low inductive design
- High switching frequency
- Clip-in PCB mounting

Housing

- *flow* 0 12 mm
- *flow* 0 17 mm 4-clip

www.vincotech.com/fastPACK-0-H

Applications

/ POWER SUPPLY / SOLAR INVERTERS / UPS / WELDING

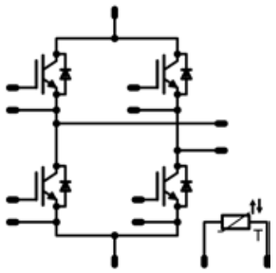

*fast*PACK 0 HC

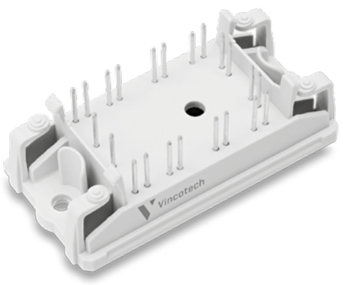

Facts

- High efficient H-bridge
- High-speed IGBT
- Integrated capacitors
- Low inductive design
- High switching frequency
- Clip-in PCB mounting

Housing

- *flow* 0 17 mm 4-clip

www.vincotech.com/fastPACK-0-HC

Applications

/ POWER SUPPLY / SOLAR INVERTERS / UPS / WELDING

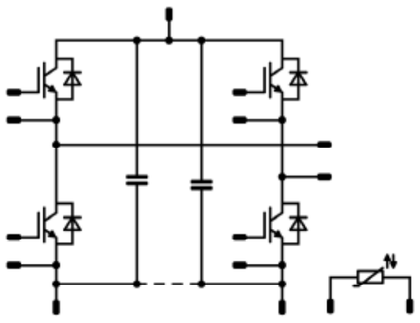

Part-No	Voltage [V]	Current [A]	Technology	Comments
V23990-P623-F24-PM	600	50	IGBT3	f_{sw} < 30 kHz
V23990-P623-F04-PM	600	60	IGBT2 HS	f_{sw} < 100 kHz
V23990-P623-F14-PM	600	60	IGBT2 HS	f_{sw} < 100 kHz improved Rth (AlN)
V23990-P624-F24-PM	600	75	IGBT3	f_{sw} < 30 kHz
V23990-P625-F24-PM	600	100	IGBT3	f_{sw} < 30 kHz
V23990-P623-F59-PM	650	50	IGBT H5	f_{sw} < 100 kHz
V23990-P627-F88-PM	1200	15	IGBT4 HS	f_{sw} < 100 kHz
V23990-P629-F48-PM	1200	40	IGBT4 HS	f_{sw} < 100 kHz

Part-No	Voltage [V]	Current [A]	Technology	Comments
V23990-P723-F04-PM	600	60	IGBT2 HS	f_{sw} < 100 kHz
10-FZ074PA030SM-L623F08	650	30	IGBT H5	fsw > 30kHz
10-PZ074PA030SM-L623F08Y	650	30	IGBT H5	fsw > 30kHz
10-FZ074PA050SM-L624F08	650	50	IGBT H5	fsw > 30kHz
10-PZ074PA050SM-L624F08Y	650	50	IGBT H5	fsw > 30kHz
10-PD074PA075SM-L625F07Y	650	75	IGBT H5	fsw > 30kHz
10-FZ074PA075SM-L625F08	650	75	IGBT H5	fsw > 30kHz
10-PZ074PA075SM-L625F08Y	650	75	IGBT H5	fsw > 30kHz
V23990-P727-F88-PM	1200	15	IGBT4 HS	f_{sw} < 100 kHz
V23990-P729-F56-PM	1200	25	IGBT2 Q	f_{sw} < 50 kHz improved R_{th} (AlN) hyperfast diodes
V23990-P729-F54-PM	1200	25	IGBT2 Q	f_{sw} < 50 kHz improved R_{th} (AlN)
V23990-P729-F46-PM	1200	25	IGBT2 Q	f_{sw} < 50 kHz hyperfast diodes
V23990-P729-F44-PM	1200	25	IGBT2 Q	f_{sw} < 50 kHz
V23990-P729-F48-PM	1200	40	IGBT4 HS	f_{sw} < 100 kHz

*flow*PACK 1 H

Facts

/ Low inductance ultra highspeed IGBT
/ Ultra-fast freewheeling diode
/ Integrated temperature sensor

Housing

/ *flow* 1 12 mm

www.vincotech.com/flowPACK-1-H

Applications

/ POWER SUPPLY / SOLAR INVERTERS / UPS / WELDING

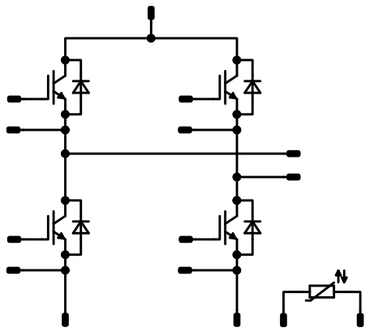

*fast*PACK 1 HC

NEW

Facts

/ High-efficient H-Bridge
/ Open emitter topology
/ Fast IGBT H5 + Fast Rapid 1 Diode
/ Integrated capacitors
/ Integrated thermistor

Housing

/ *flow* 1 12 mm

www.vincotech.com/fastPACK-1-HC

Applications

/ POWER SUPPLY / SOLAR INVERTERS / UPS / WELDING

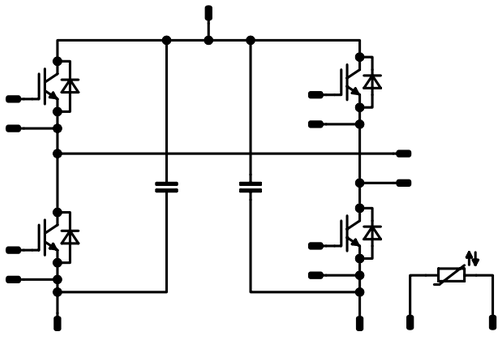

Part-No	Voltage [V]	Current [A]	Technology	Comments
10-FY064PA050SG10-M582F08	600	50	IGBT3 HS	
10-FY074PA050SM-M582F38	650	50	IGBT H5	
10-FY064PA075SG-M583F08	650	75	IGBT3 HS	
10-FY124PA040SH-L588F48	1200	40	IGBT4 HS	
10-PY124PA040SH-L588F48Y	1200	40	IGBT4 HS	
10-FY124PA040FV-L588F88	1200	40	IGBTF HS	
10-PY124PA040FV-L588F88Y	1200	40	IGBTF HS	
10-FY124PA080SH-L589F48	1200	80	IGBT4 HS	
10-PY124PA080SH-L589F48Y	1200	80	IGBT4 HS	
10-FY124PA080FV-L589F88	1200	80	IGBTF HS	
10-PY124PA080FV-L589F88Y	1200	80	IGBTF HS	

NEW

Part-No	Voltage [V]	Current [A]	Technology	Comments
10-FY074PA100SM01-L583F18	650	100	IGBT H5	f_{SW} > 30kHz, full current FWD
10-PY074PA100SM01-L583F18Y	650	100	IGBT H5	f_{SW} > 30kHz, full current FWD
10-FY074PA100SM-L583F08	650	100	IGBT H5	f_{SW} > 30kHz

*fast*PACK 0 MOS

NEW

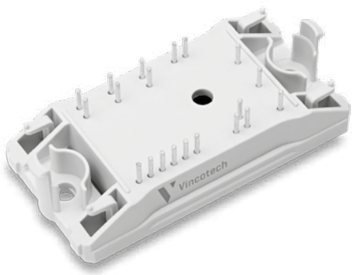

Facts

- High-speed MOS
- Integrated fast body diode, best for ZVS
- Limited voltage overshoot during hard commutation
- Reduced turn on and turn off delay times
- Softer commutation behavior and therefore better EMI ehavior
- Integrated capacitors
- NTC

Housing

- *flow* 0 12 mm

www.vincotech.com/fastPACK-0-MOS

Applications

/ POWER SUPPLY / SOLAR INVERTERS / UPS / WELDING

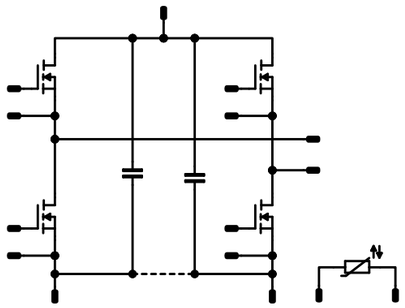

*fast*PACK 1 MOS

NEW

Facts

- High-speed MOS
- Integrated fast body diode, best for ZVS
- Limited voltage overshoot during hard commutation
- Reduced turn on and turn off delay time
- Softer commutation behavior and therefore better EMI behavior
- Integrated capacitors
- NTC

Housing

- *flow* 1 12 mm

www.vincotech.com/fastPACK-1-MOS

Applications

/ POWER SUPPLY / SOLAR INVERTERS / UPS / WELDING

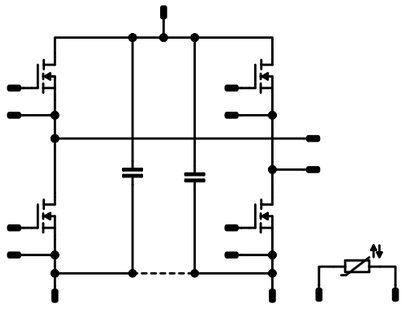

Part-No	Voltage [V]	Current [A]	Technology	Comments
10-FZ074PA080CR-L622F68	650	20	MOSFET	
10-PZ074PA080CR-L622F68Y	650	20	MOSFET	

Part-No	Voltage [V]	Current [A]	Technology	Comments
10-FY074PA040CR-L581F78	650	40	MOSFET	
10-PY074PA040CR-L581F78Y	650	40	MOSFET	
10-FY074PA020CR-L582F78	650	80	MOSFET	
10-PY074PA020CR-L582F78Y	650	80	MOSFET	

*fast*PACK 0 SiC

Facts

/ High frequency SiC MOS
/ Suitable for hard switching/soft switching
/ Increased power density
/ NTC

Housing

/ *flow* 0 12 mm

www.vincotech.com/fastPACK-0-SiC

Applications

/ POWER SUPPLY / SOLAR INVERTERS / UPS / WELDING

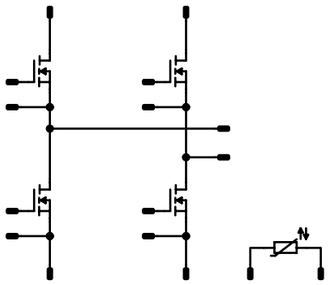

*flow*PACK 0 SiC

Facts

/ Three-phase inverter topology with split output
/ SiC-Power MOSFET´s and Schottky Diodes
/ Switching frequency >100 kHz
/ Improved switching behavior (reduced turn on energy and X-conduction)
/ Very low inductance with integrated DC-capacitors
/ Temperature sensor

Housing

/ *flow* 0 12 mm

www.vincotech.com/fastPACK-0-SiC

Applications

/ INDUSTRIAL DRIVES / POWER SUPPLY / SOLAR INVERTERS / UPS

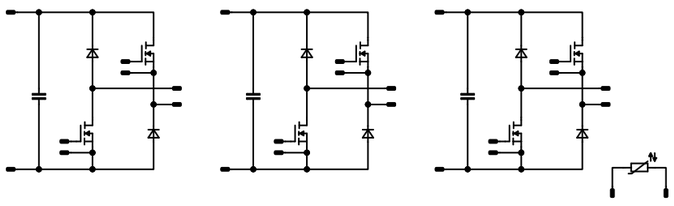

Part-No	Voltage [V]	Current [A]	Technology	Comments
10-PC094PB065ME01-L637F06Y	900	33	SiC MOSFET	f_{SW} up to 400 kHz

Part-No	Voltage [V]	Current [A]	Technology	Comments
10-PZ126PA080ME-M909F18Y	1200	35	SiC MOSFET	SiC MOSFET 2nd gen + SiC diode from Wolfspeed™
10-PZ126PA080MR-M909F28Y	1200	35	SiC MOSFET	SiC MOSFET 2nd gen + SiC diode from ROHM™

*flow*PACK 1 SiC

NEW

Facts

- / Flexible open source/open drain topology
- / Possible to be used in different applications´ designs
- / High efficiency at very light loads
- / High switching frequencies up to 200 kHz
- / NTC

Housing

- / *flow* 1 12 mm

www.vincotech.com/flowPACK-1-SiC

Applications

/ INDUSTRIAL DRIVES / POWER SUPPLY / SOLAR INVERTERS / UPS

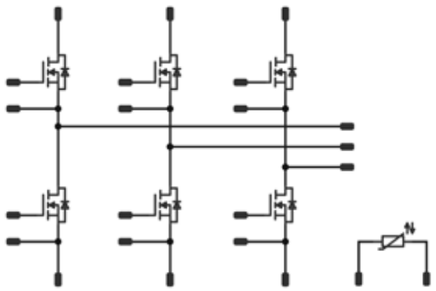

Part-No	Voltage [V]	Current [A]	Technology	Comments
10-PY126PA020MR-L227F28Y	1200	50	SiC MOSFET	SiC MOSFET from ROHM™
10-PY126PA020ME-L227F18Y	1200	50	SiC MOSFET	SiC MOSFET from Wolfspeed™

*flow*PFC 0

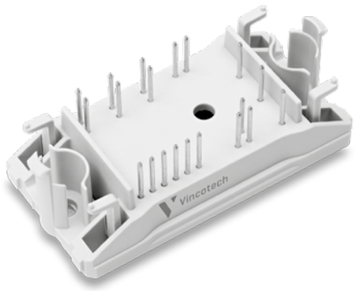

Facts

- / C6 series CoolMos™ and SiC boost diode
- / Compact and low inductance design
- / Suitable for Interleaved topology
- / Suitable for current sensing in source
- / Vincotech clip-in housing

Information

D18: w/o SCR, current sense in drain

D28: with SCR, curretn sense in drain

Housing

/ *flow* 0 17 mm

www.vincotech.com/flowPFC-0

Applications

/ EMBEDDED DRIVES / POWER SUPPLY / WELDING

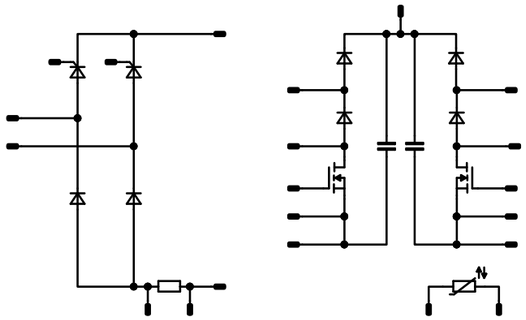

*flow*PFC 0 CD

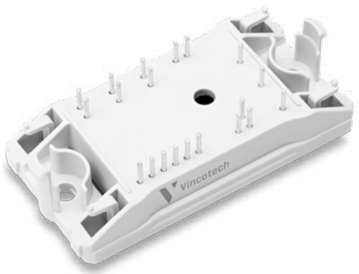

Facts

- / Current sense in collector / drain
- / Compact and low inductance design
- / Suitable for interleaved switching PFC for welding, SMPS, motor drives, chargers
- / Available with Press-fit pins

Information

D18: w/o SCR, current sense in drain

D28: with SCR, curretn sense in drain

Housing

/ *flow* 0 12 mm

www.vincotech.com/flowPFC-0-CD

Applications

/ EMBEDDED DRIVES / POWER SUPPLY / WELDING

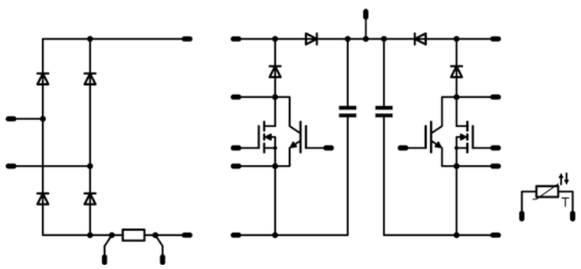

Part-No	Voltage [V]	Current [A]	Technology	Comments
10-F0062TA099FS-P980D59	600	18	MOSFET	

Part-No	Voltage [V]	Current [A]	Technology	Comments
10-FZ062TA099FH-P980D18	600	25	MOSFET	f_{sw} < 400 kHz
10-FZ062TA099FH01-P980D28	600	25	MOSFET	f_{sw} < 400 kHz
10-FZ062TA030FB-P983D18	600	30	IGBT HS	f_{sw} < 100 kHz
10-FZ062TA030FB01-P983D28	600	30	IGBT HS	f_{sw} < 100 kHz
10-FZ062TA040FB-P984D18	600	50	IGBT HS	f_{sw} < 100 kHz
10-FZ062TA040FB01-P984D28	600	50	IGBT HS	f_{sw} < 100 kHz
10-FZ062TA015SM-P985D13	650	15	IGBT H5	
10-FZ062TA030SM-P986D13	650	30	IGBT H5	
10-FZ062TA050SM-P987D13	650	50	IGBT H5	

NEW

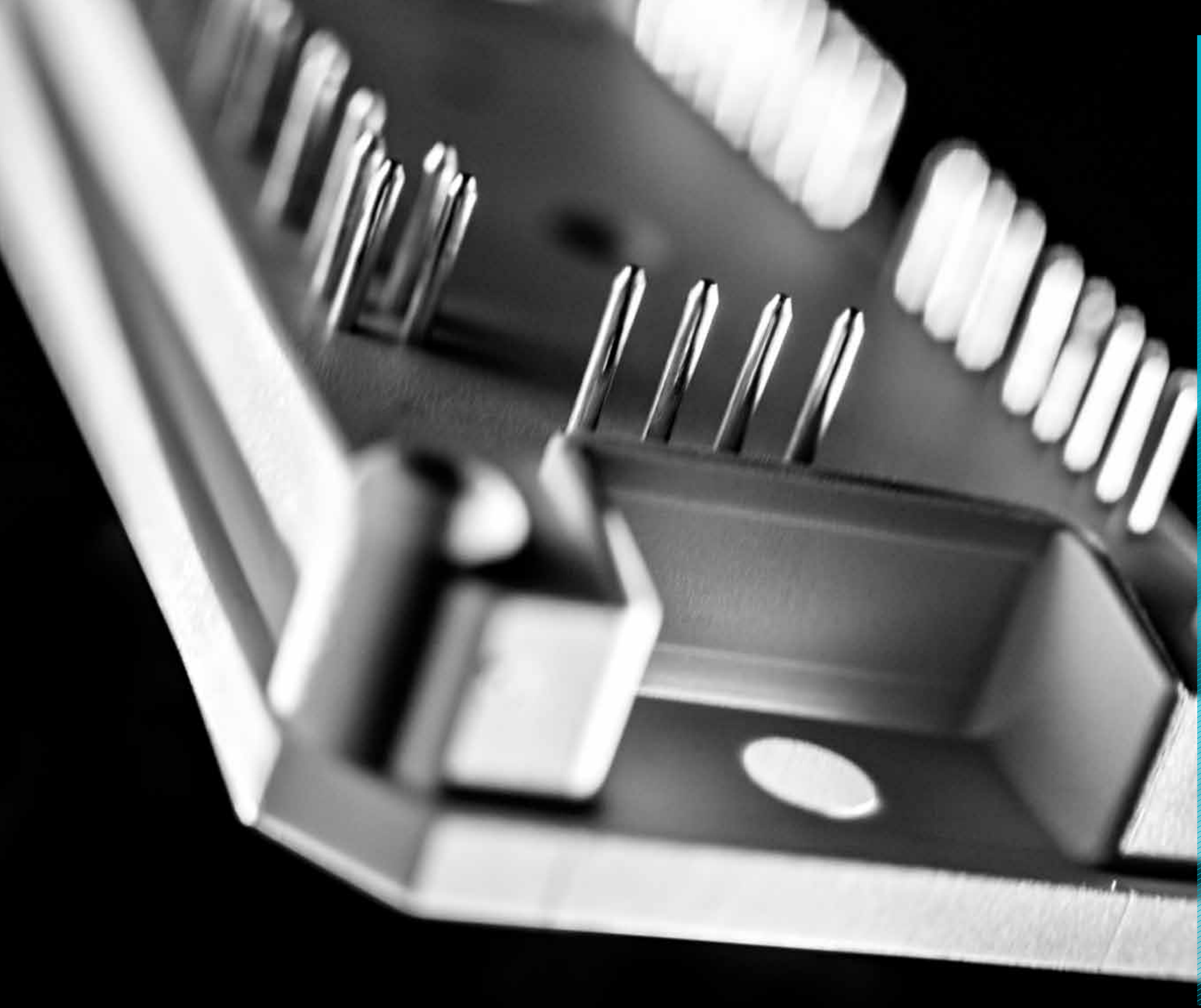

/ RECTIFIER
/ SIXPACK
/ SIXPACK + RECTIFIER
/ SEVENPACK
/ PIM
/ PIM WITH PFC
/ IPM CIP
/ IPM CI
/ HALF-BRIDGE
/ FULL BRIDGE
/ PFC

/ RPI

/ ONE-PHASE SOLAR
/ BOOSTER
/ BOOSTER SYMMETRIC
/ THREE-PHASE PFC
/ NPC
/ MNPC

/ HOUSINGS
/ HOUSING DIMENSIONS

*flow*RPI 1

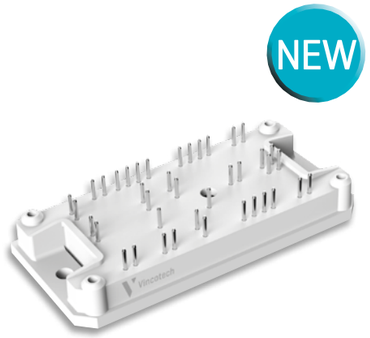

Facts

- 3-in-1 solution for compact application design
- Rectifier, dual PFC and inverter integrated
- Latest chip technologies
- Ultra-fast switching
- Ultra-low conduction and switching losses
- Enhanced layout to reduce EMI

Housing

- *flow* 1 12 mm
- *flow* 1 17 mm

www.vincotech.com/flowRPI-1

Applications

/ POWER SUPPLY / SOLAR INVERTERS / WELDING

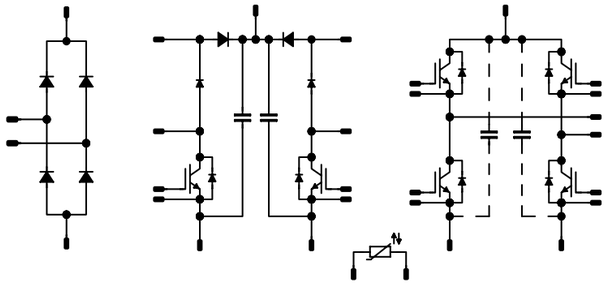

Part-No	Voltage [V]	Current [A]	Technology	Comments
10-FY07ZAA015SM-L512B28	650	15	IGBT H5	
10-FY07ZAA030SM-L513B28	650	30	IGBT H5	
10-F107ZAA045SM-L514B19	650	45	IGBT H5	
10-FY07ZAA050SM-L514B28	650	50	IGBT H5	
10-FY07ZAB050SM-L514B08	650	50	IGBT H5	Wide input voltage range rated PFC
10-F107ZAA060SM-L515B19	650	60	IGBT H5	
10-FY07ZAB075SM-L515B08	650	75	IGBT H5	Wide input voltage range rated PFC

*flow*SOL 0 BI (TL)

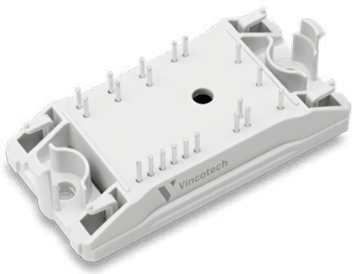

Facts

/ High efficiency
/ Dedicated designs for transformer-based and transformer-less topologies
/ Ultra-high switching frequency
/ Fast IGBT H5

Housing

/ *flow* 0 12 mm

www.vincotech.com/flowSOL-0-BI-TL

Applications

/ POWER SUPPLY / SOLAR INVERTERS

/ P984E58

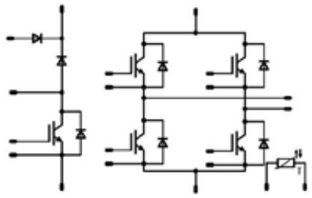

/ P984E68

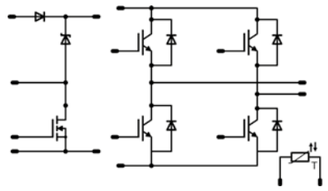

*flow*SOL 0 BI (T) primary

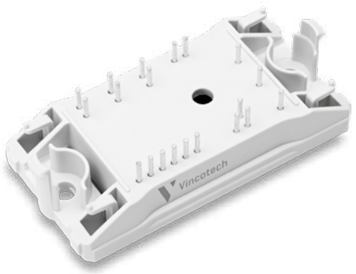

Facts

/ Transformer-less solar inverter
/ High efficiency, CoolMOS™ + SiC diode
/ Ultra-high switching frequency

Housing

/ *flow* 0 12 mm

www.vincotech.com/flowSOL-0-BI-T-primary

Applications

/ POWER SUPPLY / SOLAR INVERTERS

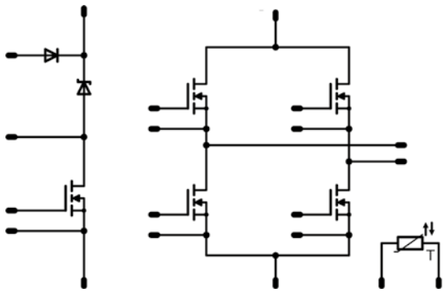

Part-No	Voltage [V]	Current [A]	Technology	Comments
10-PZ07BIA030SM01-P894E68Y	650	30	IGBT H5	70 mΩ MOSFET (boost) + SiC diode (boost) and IGBT H5 (H-bridge)
10-PZ07BIA030SM02-P894E58Y	650	30	IGBT H5	IGBT H5 (boost + H-bridge) + Si diode in boost

Part-No	Voltage [V]	Current [A]	Technology	Comments
10-FZ06BIA083FI-P896E	600	30	MOSFET	

*flow*SOL 1 BI (TL)

Facts

- Dual input booster with bypass
- Temperature sensor
- Integrated capacitor

MOSFET

- Full reactive power capability
- MOSFET with fast diode or SiC diode
- Highest efficiency
- Split output for deactivation of the intrinsic reverse diodes of the MOSFET
- Highest efficiency for reactive power
- No x-conduction problem (no negative gate bias required)

IGBT

- Resonant H-Bridge with high-speed IGBT
- Use with *flow*SOL 1 BI (T) secondary

Housing

- *flow* 1 12 mm

www.vincotech.com/flowSOL-1-BI-TL

Applications

/ POWER SUPPLY / SOLAR INVERTERS

/ M523

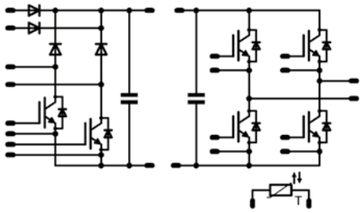

/ M528

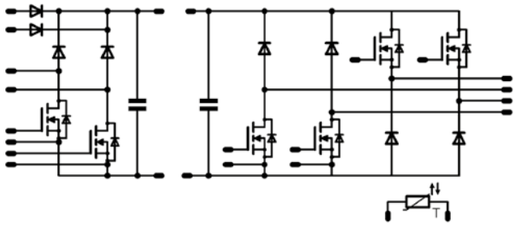

Part-No	Voltage [V]	Current [A]	Technology	Comments
10-FY06BIA050SG-M523E18	600	50	IGBT3 HS	
10-FY07BIA041MC-M528E58	650	33	MOSFET	SiC diode
10-FY07BIA041MF-M528E68	650	33	MOSFET	
10-FY07BIA050SM-M523E38	650	50	IGBT H5	
10-PY07BIA050SM-M523E38Y	650	50	IGBT H5	

NEW

*flow*SOL 1 BI (T) primary

Facts

- Dual input booster with bypass
- Resonant H-Bridge with high-speed MOSFET
- Integrated capacitor

Housing

- *flow* 1 12 mm

www.vincotech.com/flowSOL-1-BI-T-primary

Applications

/ POWER SUPPLY / SOLAR INVERTERS

/ M527

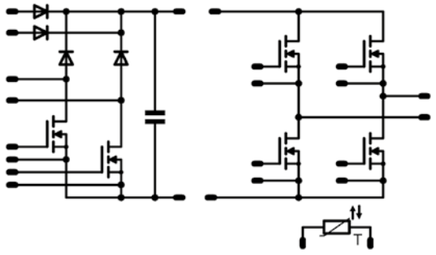

Part-No	Voltage [V]	Current [A]	Technology	Comments
10-FY06BIA080MF-M527E58	650	20	MOSFET	

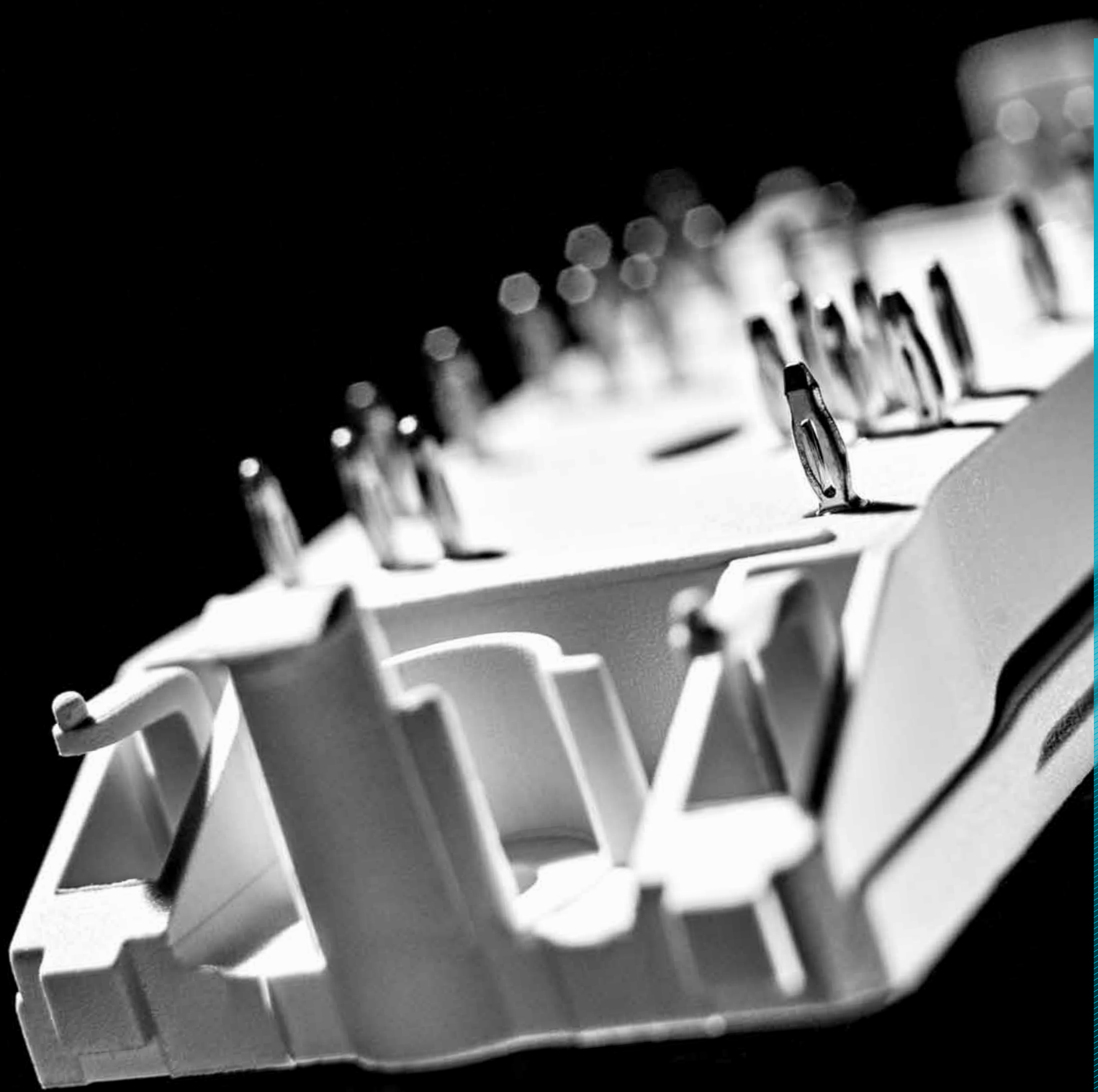

*flow*BOOST 0 dual

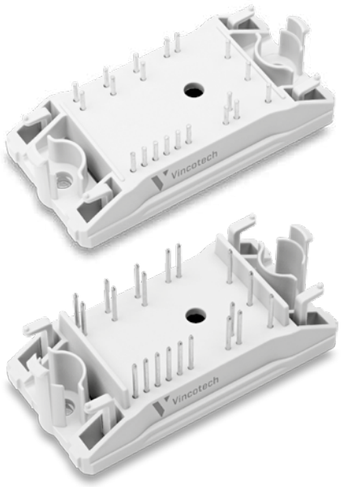

Facts

/ High efficient booster high-speed IGBT
/ Bypass diode
/ Dedicated for solar applications
/ Rated current is for each leg

Housing

/ *flow* 0 12 mm
/ *flow* 0 17 mm

www.vincotech.com/flowBOOST-0-dual

Applications

/ POWER SUPPLY / SOLAR INVERTERS

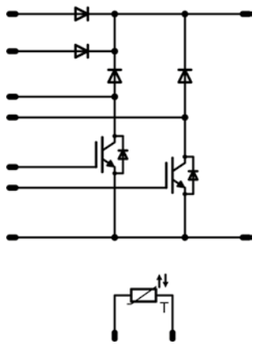

*flow*2xBOOST 0

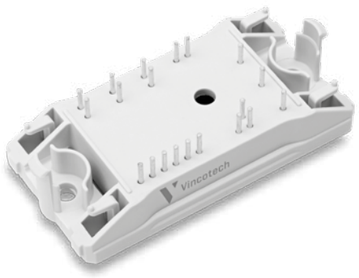

Facts

/ 2 channel BOOST topology
/ SiC-Power MOSFET´s and Schottky diodes
/ IGBT H5 and Stealth™diode
/ Very high switching frequency
/ Very low inductance with integrated DC-capacitors
/ Temperature sensor
/ Rated current is for each leg

Housing

/ *flow* 0 12 mm

www.vincotech.com/flow2xBOOST-0

Applications

/ POWER SUPPLY / SOLAR INVERTERS

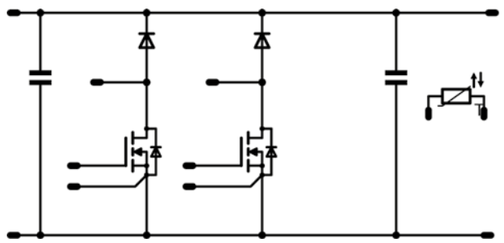

Part-No	Voltage [V]	Current [A]	Technology	Comments
V23990-P623-L82-PM	650	50	IGBT H5	IGBT H5 with 50 A Si diodes, for 110 V grid
V23990-P629-L48-PM	1200	40	IGBT4 HS	SiC diode (optimized current rating)
V23990-P629-L49-PM	1200	40	IGBT4 HS	SiC diode (optimized current rating)
V23990-P629-L59-PM	1200	40	IGBT4 HS	50 A Si diodes
V23990-P629-L63-PM	1200	40	IGBT Ufast	SiC diodes
V23990-P629-F72-PM	1200	40	IGBT Ufast	30 A STEALTH™ II diode, improved reverse protection
V23990-P629-F73-PM	1200	40	IGBT Ufast	50 A Si diode, improved reverse protection
V23990-P629-L99-PM	1200	40	IGBT Ufast	higher rated current SiC diodes, improved Rth (AlN)
V23990-P629-L43-PM	1200	50	IGBT4 HS	SiC diodes

Part-No	Voltage [V]	Current [A]	Technology	Comments
10-FZ06B2A040MF01-M575L28PM	600	40	MOSFET	
10-FZ07B2A030SM02-M575L48	650	30	IGBT H5	

*flow*3xBOOST 0

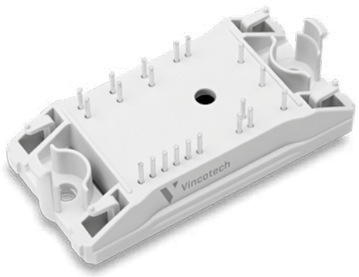

Facts

- / 3 channel BOOST topology
- / SiC-Power MOSFET´s and Schottky diodes
- / IGBT H5 and Stealth™ diode
- / Very high switching frequency
- / Very low inductance with integrated DC-capacitors
- / Temperature sensor
- / Rated current is for each leg

Housing

- / *flow* 0 12 mm

www.vincotech.com/flow3xBOOST-0

Applications

/ POWER SUPPLY / SOLAR INVERTERS

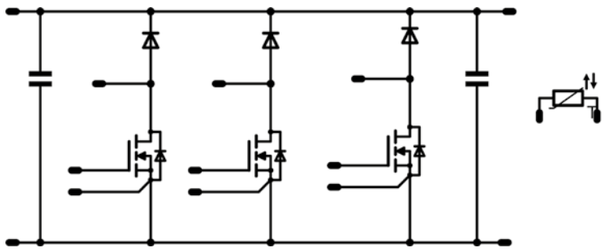

Part-No	Voltage [V]	Current [A]	Technology	Comments
10-FZ063BA040MF-M575L08	600	44	MOSFET	
10-FZ073BA030SM02-M575L38	650	30	IGBT H5	

*flow*BOOST 0 SiC

Facts

- / High efficient BOOSTER
- / SiC power MOSFET 2nd gen
- / Extremely fast switching without „tail" current
- / Rated current is for each leg

Housing

- / *flow* 0 12 mm

www.vincotech.com/flowBOOST-0-SiC

Applications

/ POWER SUPPLY / SOLAR INVERTERS

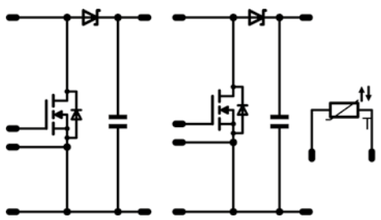

Part-No	Voltage [V]	Current [A]	Technology	Comments
10-PZ12B2A040ME01-M330L63Y	1200	35	SiC MOSFET	SiC MOSFET 2nd gen and SiC diode from Wolfspeed™
10-PZ12B2A040MR01-M330L68Y	1200	35	SiC MOSFET	SiC MOSFET 2nd gen and SiC diode from ROHM™

*flow*3xBOOST 0 SiC

Facts

- 3 channel BOOST topology SiC-Power MOSFET´s and Schottky diodes
- Switching frequency > 100 kHz
- Very low inductance with integrated DC-capacitors
- Temperature sensor
- Rated current is for each leg

Housing

- *flow* 0 12 mm

www.vincotech.com/flow3xBOOST-0-SiC

Applications

/ POWER SUPPLY / SOLAR INVERTERS

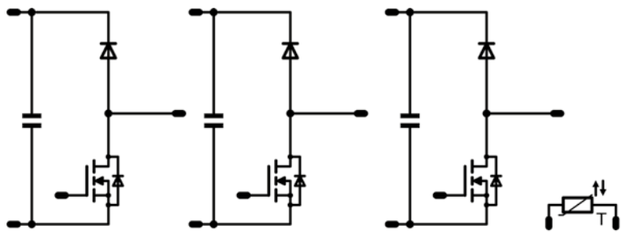

Part-No	Voltage [V]	Current [A]	Technology	Comments
10-PZ123BA080ME-M909L18Y	1200	35	SiC MOSFET	SiC diode from Wolfspeed™
10-PZ123BA080MR-M909L28Y	1200	35	SiC MOSFET	SiC diode from ROHM™

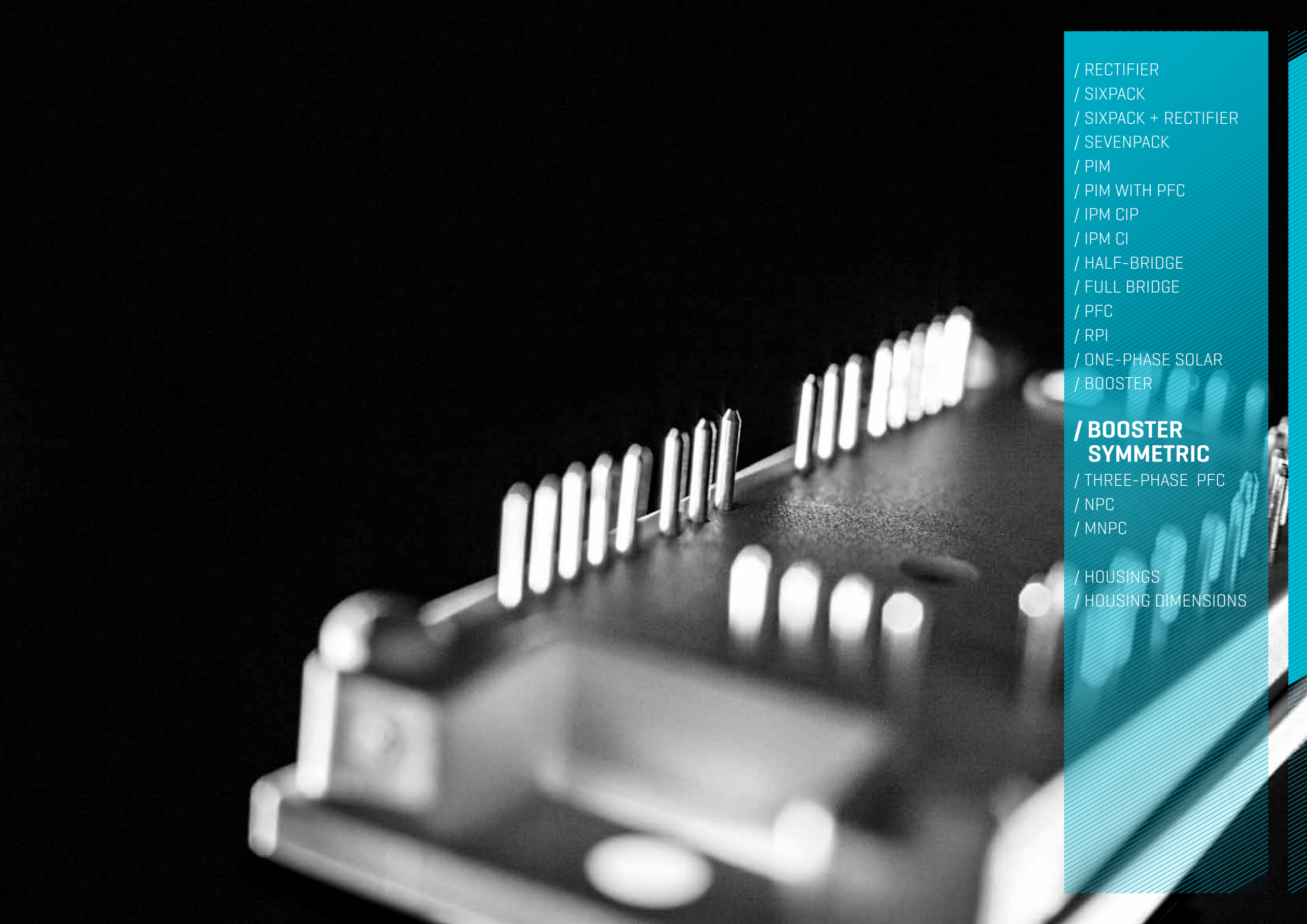

*flow*BOOST 0 symmetric

Facts

- High efficiency symmetric boost
- Dedicated designs for solar and UPS applications
- Ultra high switching frequency
- Use together with flow NPC 0
- Rated current is for each leg

Housing

- *flow* 0 12 mm

www.vincotech.com/flowBOOST-0-symmetric

Applications

/ POWER SUPPLY / SOLAR INVERTERS / UPS

/ M306

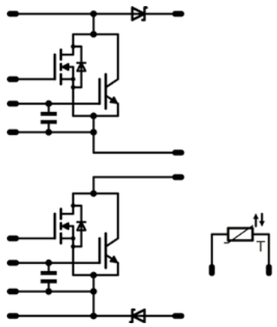

/ P91x / M30xL58

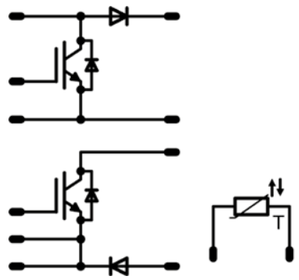

Part-No	Voltage [V]	Current [A]	Technology	Comments
10-FZ06NBA084FP-M306L48	600	84	Parallel	parallel switch + SiC diode
10-FZ06NBA110FP-M306L28	600	110	Parallel	parallel switch + SiC diode
10-FZ07NBA030SM01-P914L53	650	30	IGBT H5	
10-FZ07NBA075SM-P916L58	650	75	IGBT H5	
10-FZ07NBA100SM10-M305L68	650	100	IGBT H5	

NEW

*flow*BOOST 0 s+b

Facts

- High efficiency symmetric boost: CoolMOS™ C6 MOSFET
- Dedicated designs for solar and UPS applications
- Ultra-high switching frequency
- Use together with *flow* NPC 0
- Rated current is for each leg

Housing

- *flow* 0 12 mm

www.vincotech.com/flowBOOST-0-sym-w-bp-d

Applications

/ POWER SUPPLY / SOLAR INVERTERS / UPS

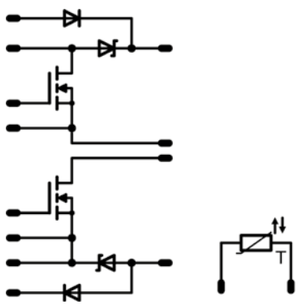

Part-No	Voltage [V]	Current [A]	Technology	Comments
10-PZ06NBA041FS-P915L68Y	600	40	MOSFET	
10-FZ06NBA041FS01-P915L78	600	40	MOSFET	SiC diodes

*flow*BOOST 1 symmetric

Facts

- High efficiency symmetric boost
- Dedicated designs for solar and UPS applications
- Ultra-high switching frequency
- Rated current is for each leg

Housing

- *flow* 1 17 mm

www.vincotech.com/ flowBOOST-1-symmetric

Applications

/ POWER SUPPLY / SOLAR INVERTERS / UPS

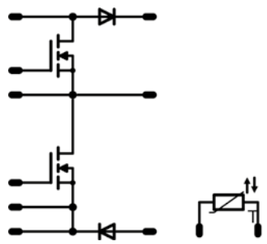

*flow*BOOST 2 symmetric

Facts

- High efficiency symmetric boost
- Dedicated designs for solar and UPS applications
- High switching frequency
- Use together with *flow* NPC 2
- Rated current is for each leg

Housing

- *flow* 2 17 mm

www.vincotech.com/ flowBOOST-2-symmetric

Applications

/ POWER SUPPLY / SOLAR INVERTERS / UPS

/ M295

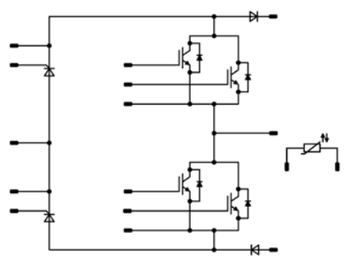

/ M235

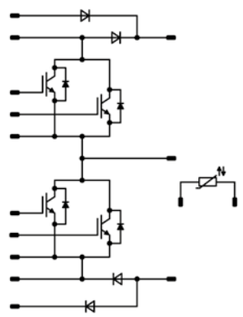

Part-No	Voltage [V]	Current [A]	Technology	Comments
10-F106BIB020FK-M285L	600	80	MOSFET	

Part-No	Voltage [V]	Current [A]	Technology	Comments
30-F206NBA200SG-M235L25	600	200	IGBT3 HS	bypass diode
30-F206NBA200SA-M295L33	600	200	IGBT3	Thyristor for UPS

VINcoBOOST X4 symmetric

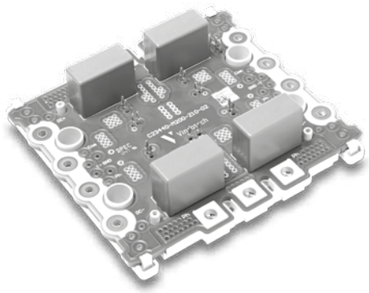

Facts

- / High efficiency symmetric boost
- / Dedicated designs for solar and UPS applications
- / Symmetric boost
- / Integrated DC-link capacitor
- / Low DC inductance (< 5 nH)
- / Transient interface for optional regeneration of switching losses
- / Temperature sensor

Housing

- / VINco X4

www.vincotech.com/ VINcoBOOST-X4-symc

Applications

/ SOLAR INVERTERS / UPS

/ M78xL

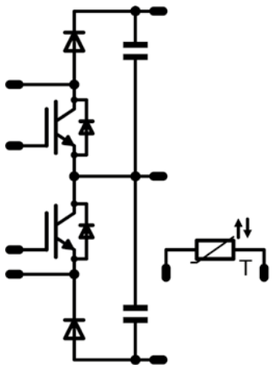

Part-No	Voltage [V]	Current [A]	Technology	Comments
70-W206NBA400SA-M786L	600	400	IGBT3	
70-W206NBA600SA-M788L	600	600	IGBT3	

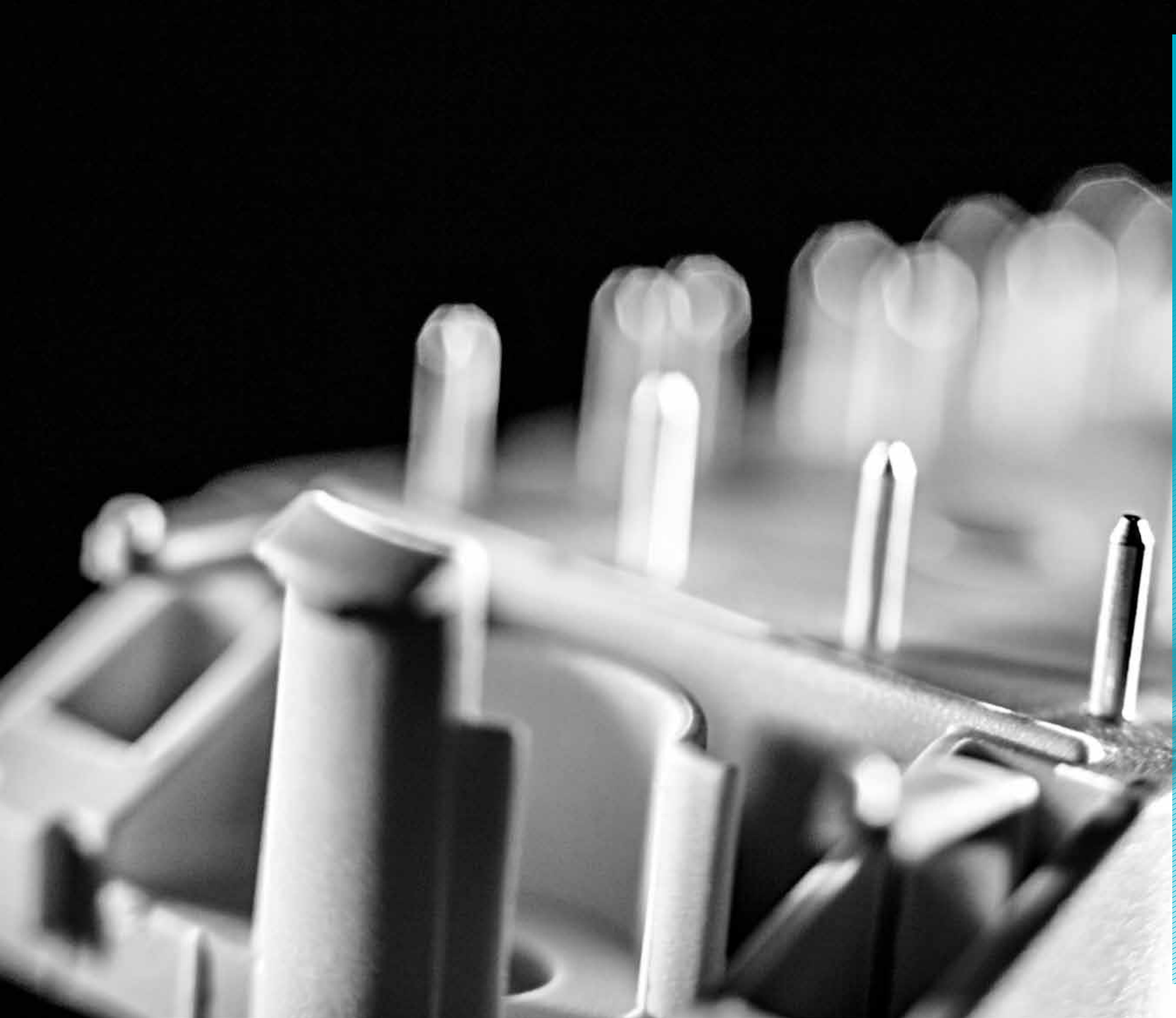

*flow*SPFC 0

NEW

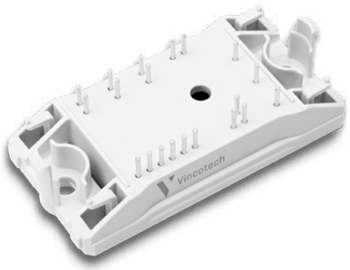

Facts

/ Ultra fast IGBT and boost diodes
/ Integrated capacitor
/ Temperature sensor

Housing

/ *flow* 0 12 mm

www.vincotech.com/flowSPFC-0

Applications

/ UPS

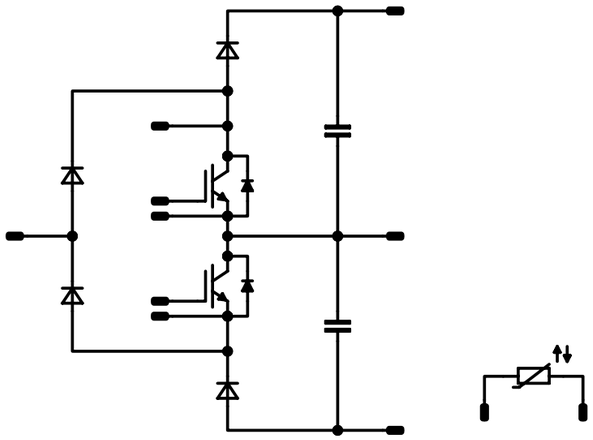

Part-No	Voltage [V]	Current [A]	Technology	Comments
10-FZ071SA050SM02-L524L18	650	50	IGBT H5	
10-FZ071SA075SM02-L525L18	650	75	IGBT H5	
10-FZ071SA100SM02-L526L18	650	100	IGBT H5	

*flow*NPC 0 IGBT

Facts

- / IGBT3 High efficiency three-level topology
- / Dedicated designs for solar and UPS applications
- / LVRT capability

Housing

- / *flow* 0 12 mm
- / *flow* 0 17 mm

www.vincotech.com/flowNPC-0-IGBT

Applications

/ POWER SUPPLY / SOLAR INVERTERS / UPS

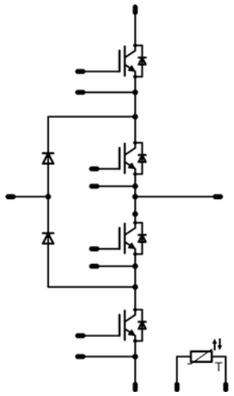

*flow*NPC 0 MOS

Facts

- / High efficiency three-level topology
- / Dedicated designs for solar and UPS applications
- / Ultra-high switching frequency
- / LVRT capability
- / Reactive power

Housing

- / *flow* 0 12 mm

www.vincotech.com/flowNPC-0-MOS

Applications

/ POWER SUPPLY / SOLAR INVERTERS / UPS

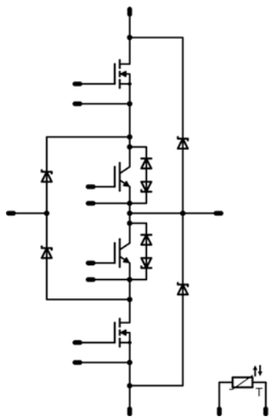

Part-No	Voltage [V]	Current [A]	Technology	Comments
10-FZ06NIA030SA-P924F33	600	30	IGBT3	
10-FZ06NIA050SA-P925F33	600	50	IGBT3	
10-FZ06NIA075SA-P926F33	600	75	IGBT3	
10-F007NIA030SM-P965F39	650	30	IGBT H5	high switching frequency, IGBT H5 + STEALTH™ diode
10-F007NIA030SM01-P965F49	650	30	IGBT H5	high switching frequency, IGBT H5 + SiC diode
10-F007NRA050SG-P966F09	650	50	IGBT3	high-speedIGBT3 high-speed + 1200 V IGBT, in neutral path + SiC diode
10-FZ07NIA060SM-P926F43	650	60	IGBT H5	all switches IGBT H5 outer switch with ufast diode
10-FZ06NRA060FU-P967F08	650	60	IGBT	IGBT Ufast + IGBT3, STEALTH™
10-FZ06NRA075FU-P969F08	650	75	IGBT	IGBT Ufast + IGBT3, STEALTH™

Part-No	Voltage [V]	Current [A]	Technology	Comments
10-FZ06NRA045FH01-P965F10	600	30	MOSFET	CoolMOS™ CP + IGBT3, STEALTH™ II diodes
10-FZ06NRA045FH-P965F	600	30	MOSFET	CoolMOS™ CP + IGBT3, SiC diodes
10-FZ06NRA041FS03-P965F78	600	30	MOSFET	CoolMOS™ C6 + IGBT3, STEALTH™ II diode
10-FZ06NRA041FS02-P965F68	600	30	MOSFET	CoolMOS™ C6 + IGBT3, SiC diode
10-FZ06NIA045FH-P925F	600	30	MOSFET	CoolMOS™ CP
10-FZ06NIA045FH01-P925F10	600	30	MOSFET	CoolMOS™ CP

*flow*NPC 0 parallel

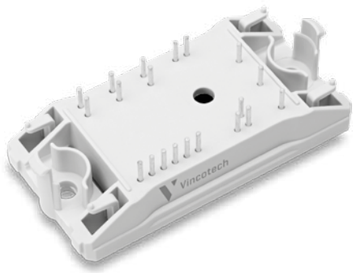

Facts

/ High efficiency three-level topology
/ Dedicated designs for solar and UPS applications
/ Ultra-high switching frequency

Housing

/ *flow* 0 12 mm

www.vincotech.com/flowNPC-0-parallel

Applications

/ POWER SUPPLY / SOLAR INVERTERS
/ UPS

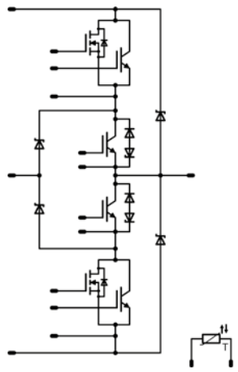

*flow*NPC 1

Facts

/ High efficient three-level topology
/ IGBT (600 V/650 V) technology for low conduction losses

Housing

/ *flow* 1 12 mm
/ *flow* 1 17 mm

www.vincotech.com/flowNPC-1

Applications

/ POWER SUPPLY / SOLAR INVERTERS
/ UPS

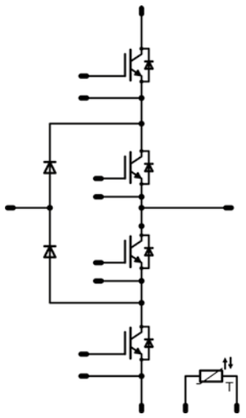

Part-No	Voltage [V]	Current [A]	Technology	Comments
10-FZ06NPA045FP-P967F	600	50	Parallel	CoolMOS™ + IGBT, IGBT3, SiC diodes
10-FZ06NPA045FP01-P967F10	600	50	Parallel	CoolMOS™ + IGBT, IGBT3, Stealth
10-FZ06NRA069FP02-P967F68	600	75	Parallel	C6 CoolMOS™ + IGBT, IGBT3, SiC diodes
10-FZ06NRA069FP03-P967F78	600	75	Parallel	C6 CoolMOS™ + IGBT, IGBT3, STEALTH™ II
10-FZ06NPA070FP-P969F	600	75	Parallel	
10-FZ06NPA070FP01-P969F10	600	75	Parallel	
10-FZ06NRA084FP03-P969F78	600	100	Parallel	C6 CoolMOS™ + IGBT, IGBT3, STEALTH™ & trade II
10-FZ06NRA084FP02-P969F68	600	100	Parallel	C6 CoolMOS™ + IGBT, IGBT3, SiC diodes

Part-No	Voltage [V]	Current [A]	Technology	Comments
10-F106NIA100SA-M135F	600	100	IGBT3	
10-F106NIA150SA-M136F	600	150	IGBT3	
10-PY07NIB080SM03-L095F03Y	650	80	IGBT H5	4 quadrant operation, very high speed
10-F107NIB150SG06-M136F39	650	150	IGBT3 HS	IGBT3 high-speed + fast Si diodes, improved R_{th} (AlN)
10-FY07NPA150SM01-L364F08	650	150	IGBT H5	IGBT H5 and IGBT L5 and Stealth™ + capacitors; for solar
10-FY07NPA150SM02-L365F08	650	150	IGBT H5	4 quadrant operation, very high speed + capacitors; for ESS
10-FY07NPA200SM02-L366F08	650	200	IGBT H5	4 quadrant operation, very high speed + capacitors; for ESS

*flow*3xNPC 1

Facts

/ High efficient three-phase
/ Three-phase application in a single housing
/ Dedicated designs for solar and UPS application

Housing

/ *flow* 1 12 mm

www.vincotech.com/flow3xNPC-1

Applications

/ POWER SUPPLY

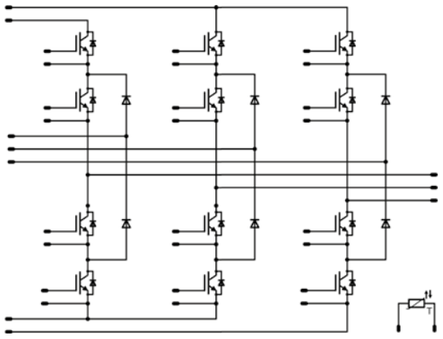

*flow*NPC 1 split

NEW

Facts

/ High DC-Link voltages
/ High efficiency with high speed IGBT
/ 4 quadrant operation
/ Fast switching frequencies
/ Integrated temperature sensor

Housing

/ *flow* 1 12 mm

www.vincotech.com/flowNPC-1-split

Applications

/ POWER SUPPLY

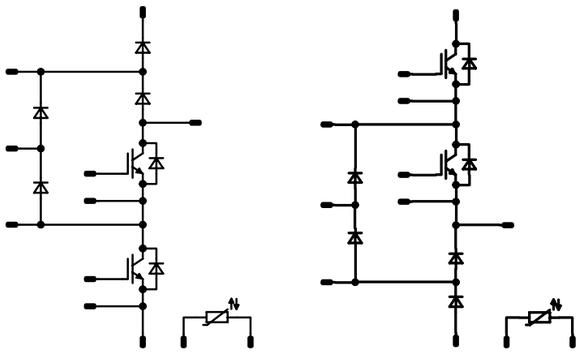

Part-No	Voltage [V]	Current [A]	Technology	Comments
10-PY07N3A015SM-M892F08Y	650	15	IGBT H5	3xNPC, IGBT H5 + Rapid™ diode
10-PY07N3A030SM-M894F08Y	650	30	IGBT H5	3xNPC, IGBT H5 + Rapid™ diode
10-PY07N3A050SM-M896F04Y	650	50	IGBT H5	3xNPC, IGBT H5 + IGBT L5 +Rapid™ diode

Part-No	Voltage [V]	Current [A]	Technology	Comments
10-FY24NIB150SH01-L728F08	2400	150	IGBT4 HS	
10-FY24NIC150SH01-L738F08	2400	150	IGBT4 HS	

*flow*NPC 1 MOS

Facts

- / Ultra-high efficient NPC with pure MOSFET switches SiC diodes
- / Split output eliminates x-conduction and enables reactive power
- / Ultra fast switching
- / Low inductance layout

Housing

/ *flow* 1 12 mm

www.vincotech.com/flowNPC-1-MOS

Applications

/ POWER SUPPLY / SOLAR INVERTERS / UPS

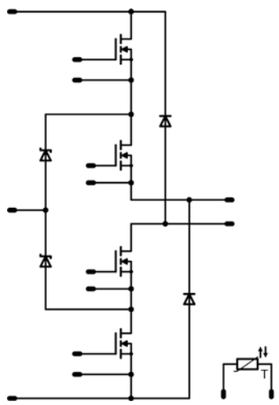

Part-No	Voltage [V]	Current [A]	Technology	Comments
10-PY06NRA041FS-M413FY	600	30	MOSFET	C6 + SiC diode
10-PY06NRA021FS-M410FY	600	60	MOSFET	C6 + SiC diode

*flow*NPC 2

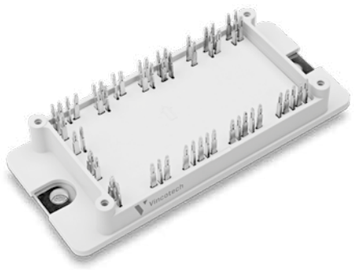

Facts

- / High efficient three-level topology
- / IGBT3 (600 V) technology for low saturation losses
- / Low inductance layout
- / For solar, UPS and motor drives
- / High power *flow* 2 housing

Housing

/ *flow* 2 17 mm

www.vincotech.com/flowNPC-2

Applications

/ POWER SUPPLY / SOLAR INVERTERS / UPS

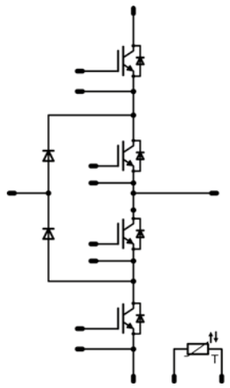

Part-No	Voltage [V]	Current [A]	Technology	Comments
30-F206NIA200SA-M105F	600	200	IGBT3	
30-F206NIA200SG-M105F25	600	200	IGBT3 HS	IGBT3 high-speed
30-F206NIA300SA-M106F	600	300	IGBT3	

VINcoNPC X4

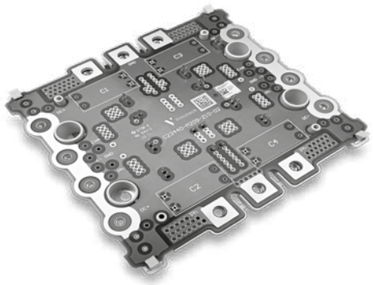

Facts

/ 2400 V NPC-topology
/ Low commutation inductance
/ High power screw interface
/ Optional assymetrical inductance technology

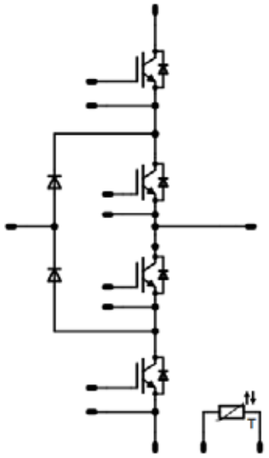

Housing

/ VINco X4 (w/o capacitors)

www.vincotech.com/VINcoNPC X4

Applications

/ POWER SUPPLY / SOLAR INVERTERS / UPS

VINcoNPC X8

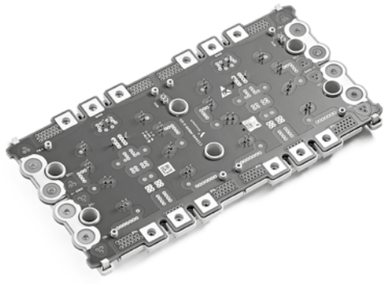

Facts

/ 2400 V NPC-topology
/ Low commutation inductance
/ High power screw interface
/ Optional asymmetrical inductance technology

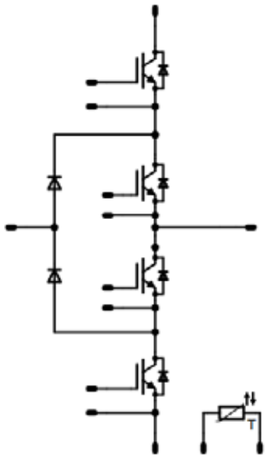

Housing

/ VINco X8 (w/o capacitors)

www.vincotech.com/VINcoNPC X8

Applications

/ POWER SUPPLY / SOLAR INVERTERS / UPS

Part-No	Voltage [V]	Current [A]	Technology	Comments
70-W224NIA400SH-M400P	2400	400	IGBT4 HS	

Part-No	Voltage [V]	Current [A]	Technology	Comments
70-W424NIA800SH-M800F	2400	800	IGBT4 HS	

VINcoNPC X12

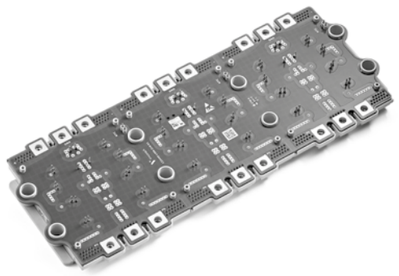

Facts

- 2400 V NPC-topology (2x 1200 V)
- High power screw interface
- Snubber diode for optional asymmetrical inductance
- High speed buck IGBT´s
- Temperature sensor

Housing

- VINco X12 (w/o capacitors)

www.vincotech.com/VINcoNPC X12

Applications

/ POWER SUPPLY / SOLAR INVERTERS / UPS

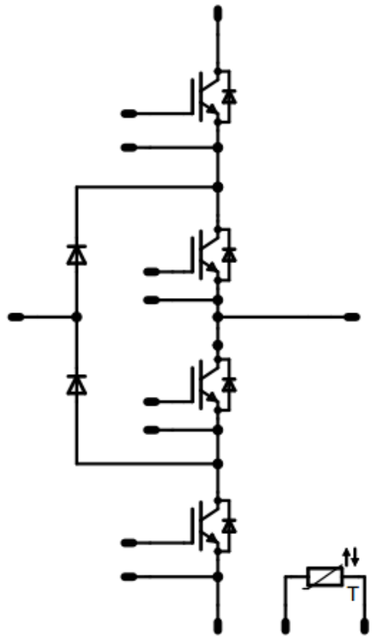

Part-No	Voltage [V]	Current [A]	Technology	Comments
70-W624N34A1K2SC-L400FP	2400	1200	IGBT4 HS	IGBT4 + IGBT4 HS
70-W624N3A1K2SC01-L400FP10	2400	1200	IGBT4	

NEW

*flow*MNPC 0

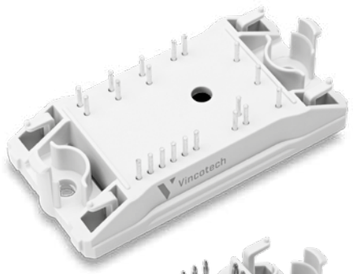

Facts

- High efficiency three-level
- Dedicated designs for solar and UPS applications
- Compatible with *flow* BOOST 0

Housing

- *flow* 0 12 mm
- *flow* 0 17 mm

www.vincotech.com/flowMNPC-0

Applications

/ POWER SUPPLY / SOLAR INVERTERS / UPS

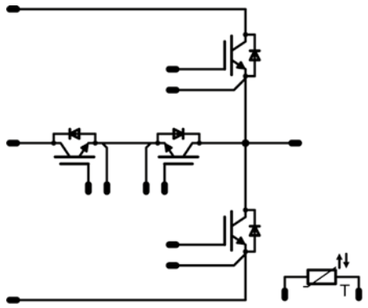

*flow*MNPC 0 SiC

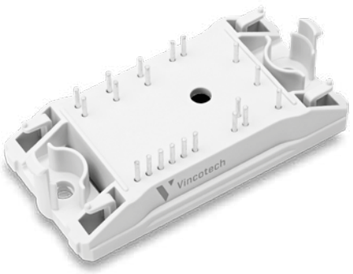

Facts

- Ultra high efficient SiC power
- MOSFET 2nd gen, SiC Power and Schottky diode latest gen
- Split output eliminates x-conduction
- Extremely fast switching

Housing

- *flow* 0 12 mm

www.vincotech.com/flowMNPC-0-SIC

Applications

/ POWER SUPPLY / SOLAR INVERTERS / UPS

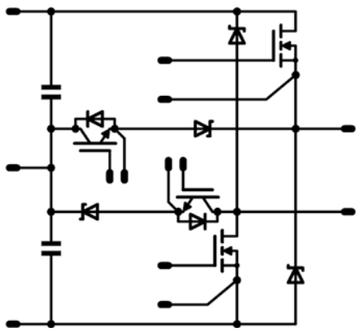

Part-No	Voltage [V]	Current [A]	Technology	Comments
10-FZ07NMA100SM-M265F58	650	100	IGBT H5	for 110 V grid
10-FZ12NMA040SH-M267F	1200	40	IGBT4 HS	
10-FZ12NMA080NS03-M260F38	1200	80	IGBT TFS II	
10-PZ12NMA080NS03-M260F38Y	1200	80	IGBT TFS II	
10-PZ12NMA080SH23-M260F03Y	1200	80	IGBT4 HS	Ultra fast diodes
10-F012NME080SH-M910F09	1200	80	IGBT4 HS	Similar to M260F03 but with P96x NPC pinout

NEW

Part-No	Voltage [V]	Current [A]	Technology	Comments
10-PZ12NMA027ME-M340F63Y	1200	100	SiC MOSFET	2nd gen SiC MOSFET and SiC diode from Wolfspeed™
10-PZ12NMA027MR-M340F68Y	1200	100	SiC MOSFET	2nd gen SiC MOSFET and SiC diode from ROHM™

*flow*MNPC 1

Facts

- High efficient three-level
- Split output eliminates x-conduction
- Dedicated designs for solar and UPS applications
- High switching frequency
- Available with Press-fit pins
- Reactive power capability + LVRT

Housing

- *flow* 1 12 mm

www.vincotech.com/flowMNPC-1

Applications

/ POWER SUPPLY / SOLAR INVERTERS / UPS

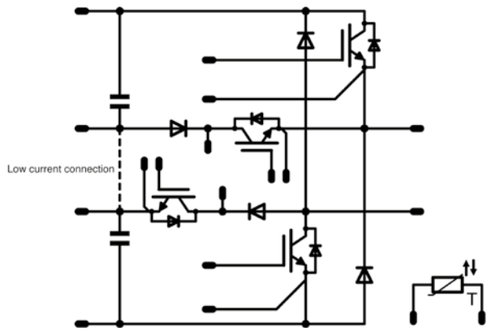

Part-No	Voltage [V]	Current [A]	Technology	Comments
10-FY12NMA080SH-M427F	1200	80	IGBT4 HS	
10-FY12NMA160SH-M420F	1200	160	IGBT4 HS	
10-FY12NMA160SH01-M820F18	1200	160	IGBT4 HS	improved LVRT

*flow*3xMNPC 1

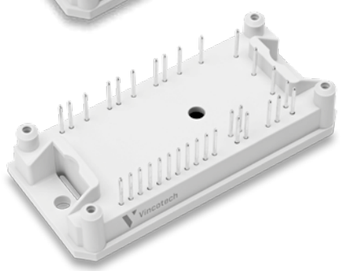

Facts

- High efficient three-phase mixed voltage NPC topology
- Three-phase application in a single housing
- Dedicated designs for solar and UPS applications
- Available with Press-fit pins

Housing

- *flow* 1 12 mm (xx8)
- *flow* 1 17 mm (xx9)

www.vincotech.com/flow3xMNPC-1

Applications

/ POWER SUPPLY / SOLAR INVERTERS / UPS

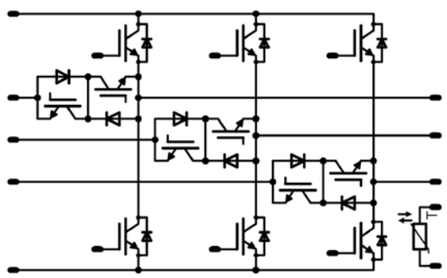

Part-No	Voltage [V]	Current [A]	Technology	Comments
10-FY12M3A025SH-M746F08	1200	25	IGBT4 HS	3x MNPC
10-F112M3A025SH-M746F09	1200	25	IGBT4 HS	3x MNPC
10-FY12M3A040SH-M749F08	1200	40	IGBT4 HS	3x MNPC
10-F112M3A040SH-M749F09	1200	40	IGBT4 HS	3x MNPC

*flow*MNPC 2

Facts

- High efficient three-level
- Split output eliminates x-conduction
- Dedicated designs for solar and UPS applications
- High switching frequency

Housing

- *flow* 2 13 mm

www.vincotech.com/flowMNPC-2

Applications

/ POWER SUPPLY / SOLAR INVERTERS / UPS

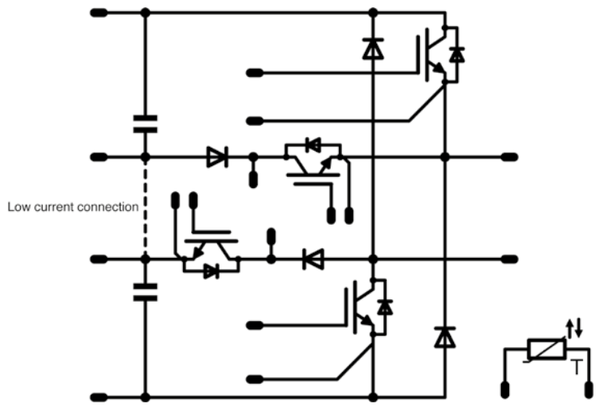

Part-No	Voltage [V]	Current [A]	Technology	Comments
30-FT12NMA160SH-M669F08	1200	160	IGBT4 HS	IGBT4
30-FT12NMA160SH02-M669F28	1200	160	IGBT4 HS	IGBT4, improved neutral path
30-FT12NMA200SH-M660F08	1200	200	IGBT4 HS	IGBT4

VINcoMNPC X4

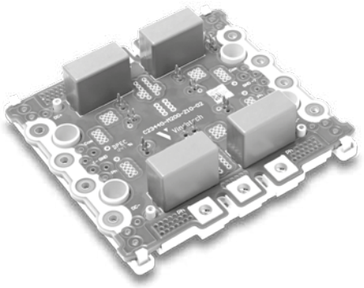

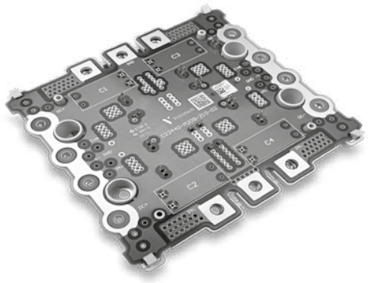

Facts

- High efficient mixed voltage NPC topology
- Low stray inductance with integrated DC snubber capacitors
- Screw terminals
- Dedicated for high efficient solar and UPS applications
- Low inductive interface

Housing

- VINcoMNPC X4

www.vincotech.com/VINcoMNPC-X4

Applications

/ POWER SUPPLY / SOLAR INVERTERS / UPS

/ M20xP / M70xP

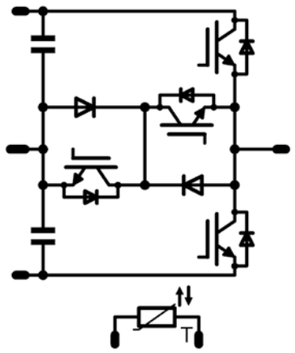

/ M20xP62

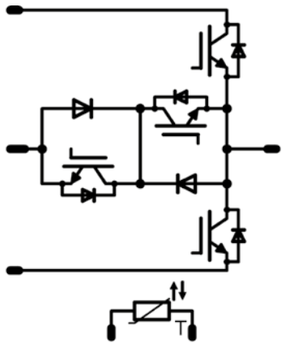

Part-No	Voltage [V]	Current [A]	Technology	Comments
70-W212NMA300SC-M208P	1200	300	IGBT4	
70-W212NMA400SC-M209P	1200	400	IGBT4	
70-W212NMC400SH01-M709P	1200	400	IGBT4 HS	
70-W212NMA400NB02-M209P62	1200	400	M6.1	
70-W212NMA600SC-M200P	1200	600	IGBT4	
70-W212NMC600SH01-M700P	1200	600	IGBT4 HS	
70-W212NMA600NB04-M200P60	1200	600	M6.1	
70-W212NMA600NB02-M200P62	1200	600	M6.1	

VINcoMNPC X12

NEW

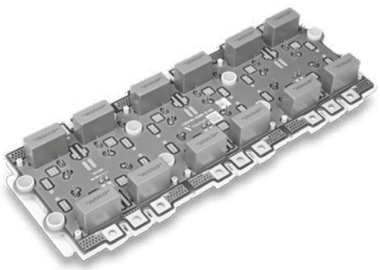

Facts

- High efficient mixed voltage NPC topology
- Low stray inductance with integrated DC snubber capacitors
- Low inductive interface

Housing

- VINcoMNPC X12

www.vincotech.com/VINcoMNPC-x12

Applications

/ POWER SUPPLY / SOLAR INVERTERS / UPS

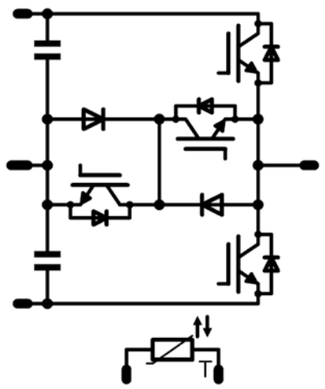

Part-No	Voltage [V]	Current [A]	Technology	Comments
70-W612M3A1K8SC02-L300FP70	1200	1800	IGBT4	improved NTC accuracy

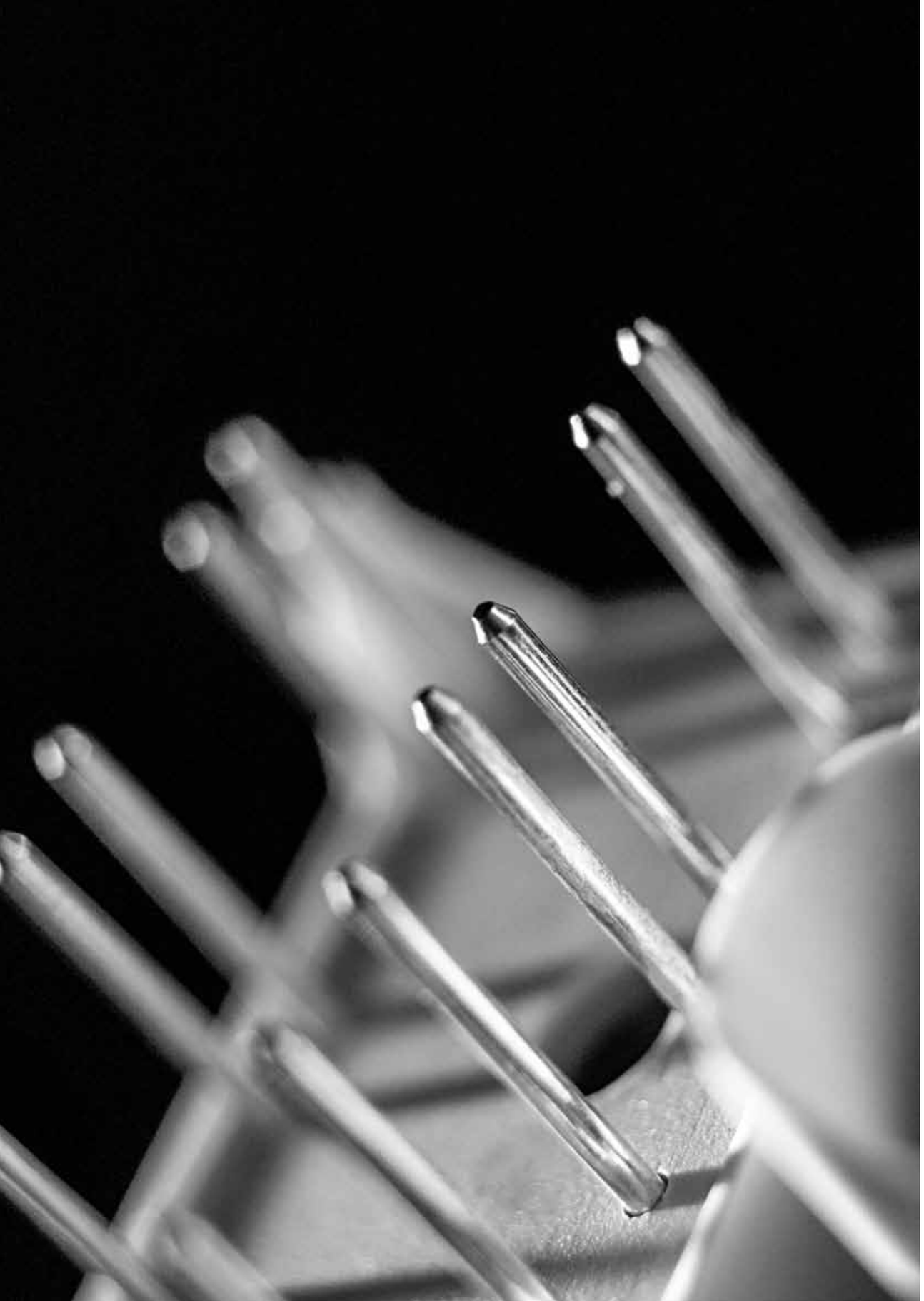

HOUSING ITEMS

Housing	*flow* 0B	*flow* 0	*flow* 1	*flow* 1B	*flow* 2	*flow*90 0	*flow*90 1	VINco X
Electrical connection to PCB	solder	solder Press-fit	solder Press-fit	solder Press-fit	solder Press-fit	solder	solder	screw
Mechanical connection to PCB	screw	2-clip 4-clip	2-clip screw	screw	screw	optional 2-clip	2-clip	screw
Baseplate	▫	▫	▫	▫	●	▫	▫	●
Height (mm)	17	12 / 17	12 / 17	17	13 / 17	38	35	14.75 – 17.15*

Housing	MiniSKiiP® 0	MiniSKiiP® 1	MiniSKiiP® 2	MiniSKiiP® 3
Contacts	spring	spring	spring	spring
Baseplate	▫	▫	▫	▫
Height (mm)	16	16	16	16

* Depending on the power
● Yes ▫ No

www.vincotech.com/housings

flow 0B 17 mm

Housing dimensions:
Height: 17 mm
Lenght: 35 mm
Width: 37 mm

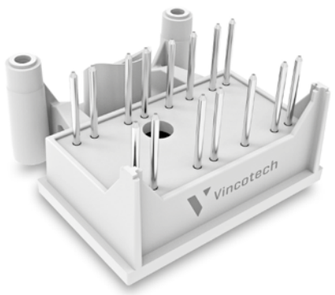

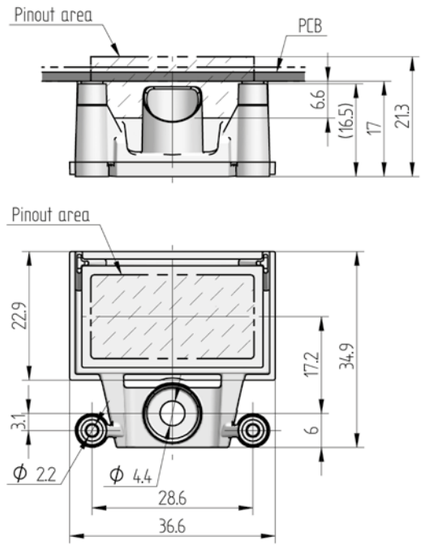

flow 0 17 mm

Housing dimensions:
Height: 17 mm
Lenght: 66 mm
Width: 33 mm

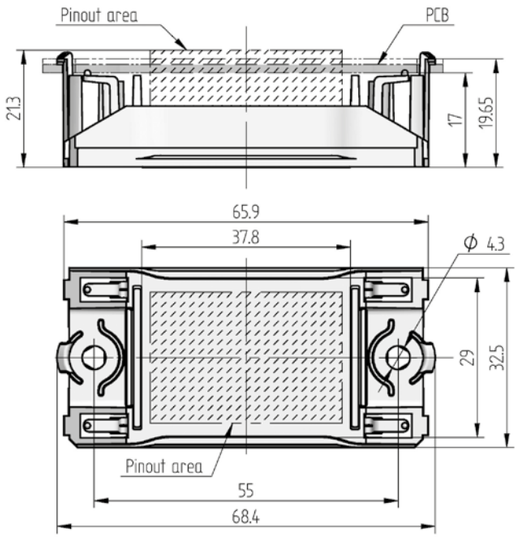

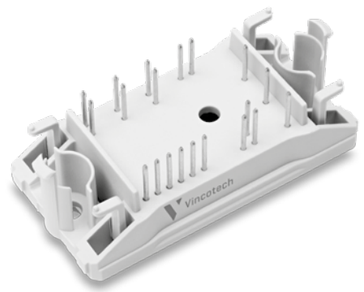

flow 0 12 mm

Housing dimensions:
Height: 12 mm
Lenght: 66 mm
Width: 33 mm

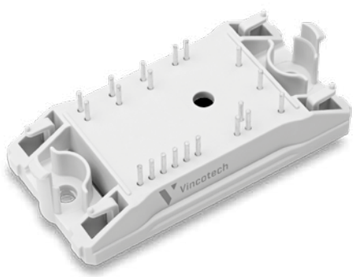

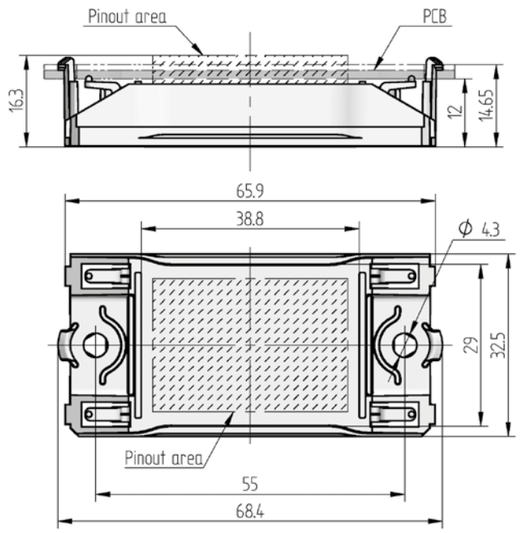

flow 0 17 mm 4-clip

Housing dimensions:
Height: 17 mm
Lenght: 66 mm
Width: 33 mm

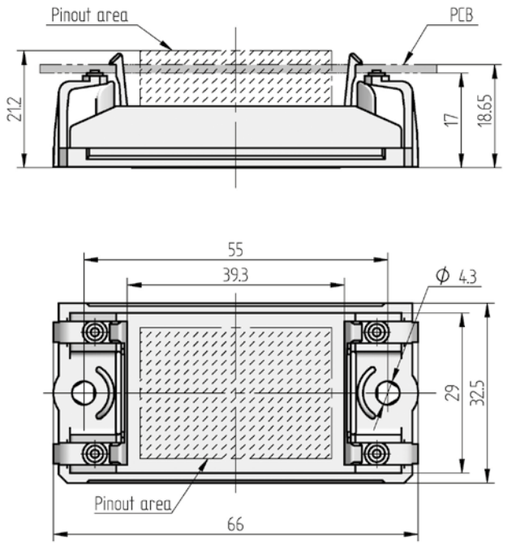

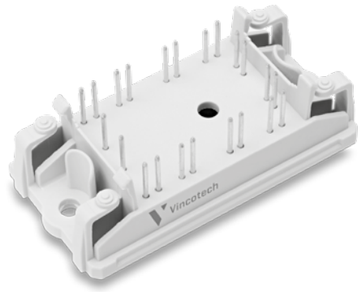

*flow*90 0

Housing dimensions:
Height: 38 mm
Width: 66 mm
Depth: 21 mm

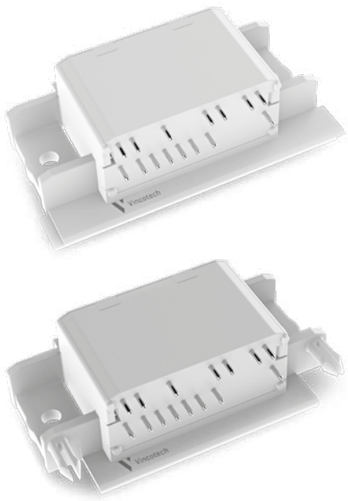

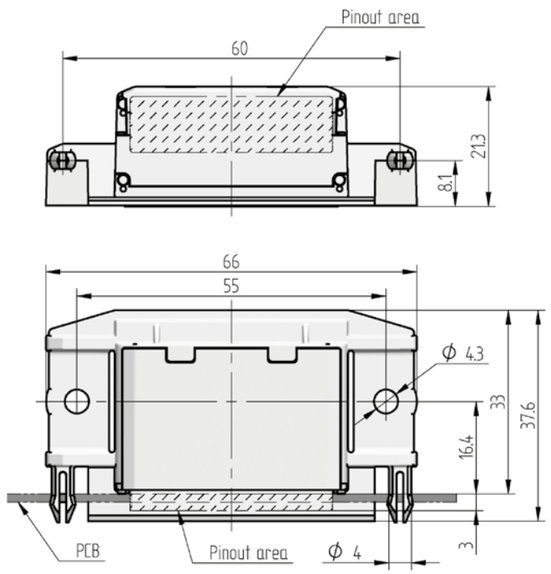

flow 1 17 mm

Housing dimensions:
Height: 17 mm
Lenght: 82 mm
Width: 38 mm

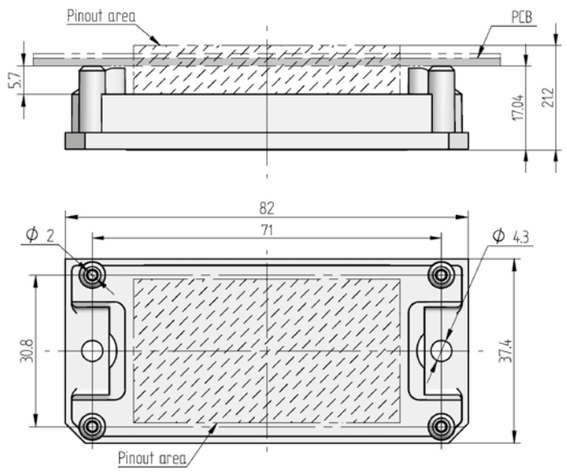

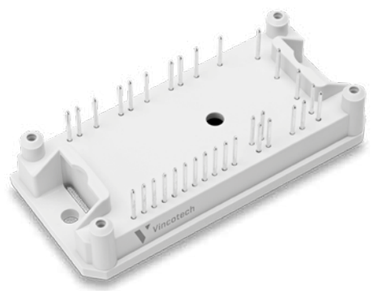

flow 1 12 mm

Housing dimensions:
Height: 12 mm
Lenght: 82 mm
Width: 38 mm

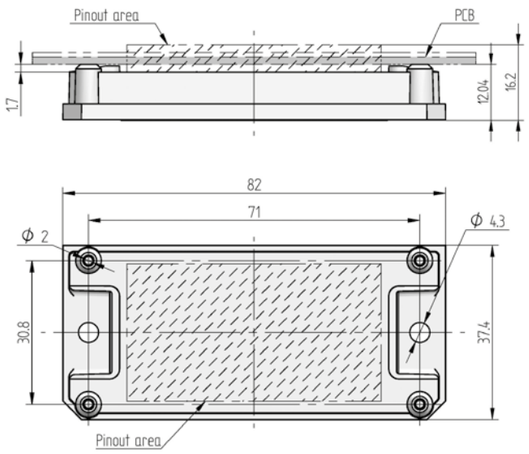

flow 1B

Housing dimensions:
Height: 17 mm
Lenght: 72 mm
Width: 36 mm

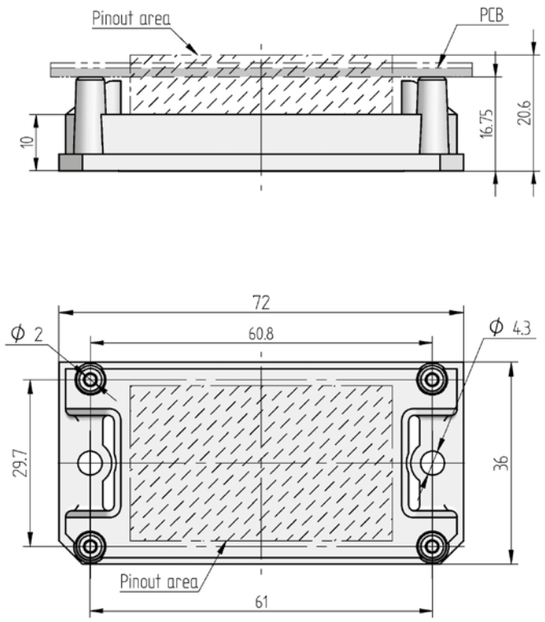

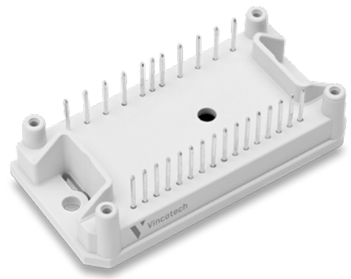

*flow*90 1

Housing dimensions:
Height: 35 mm
Width: 84 mm
Depth: 21 mm

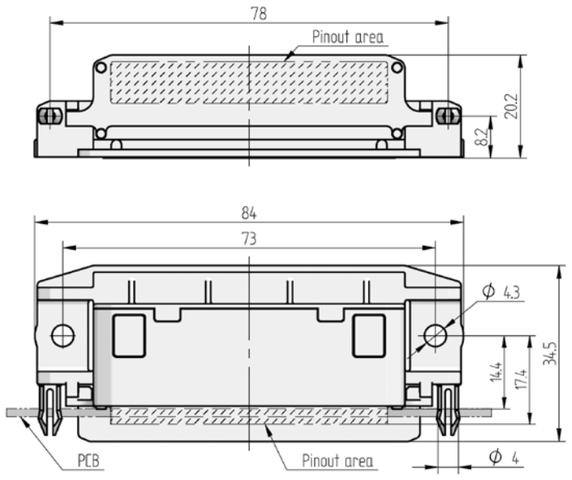

flow 2 13 mm

Housing dimensions:
Height: 13 mm
Lenght: 107 mm
Width: 47 mm

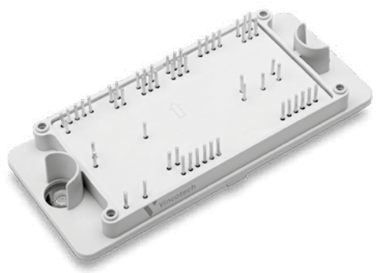

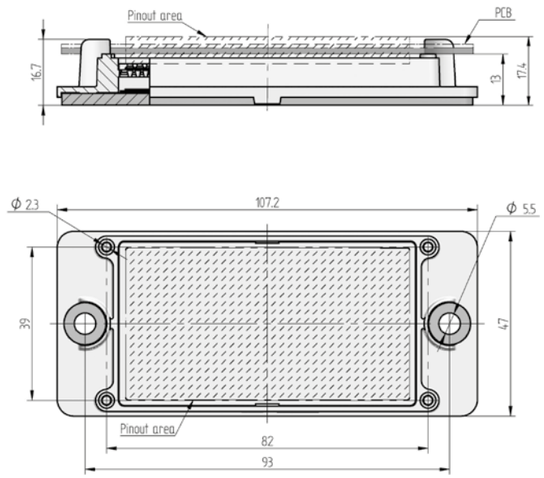

flow 2 17 mm

Housing dimensions:
Height: 17 mm
Lenght: 107 mm
Width: 47 mm

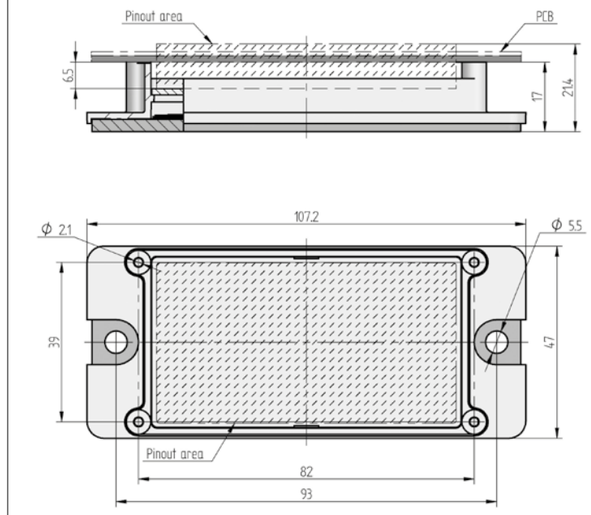

VINco X4

Housing dimensions:
Height: 14.75 – 17.15 mm*
Lenght: 105 mm
Width: 135 mm

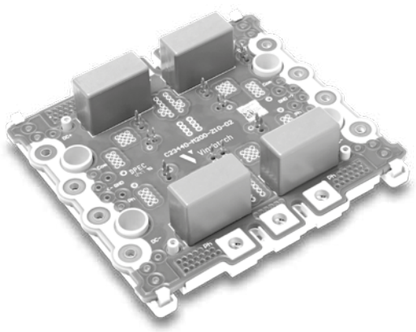

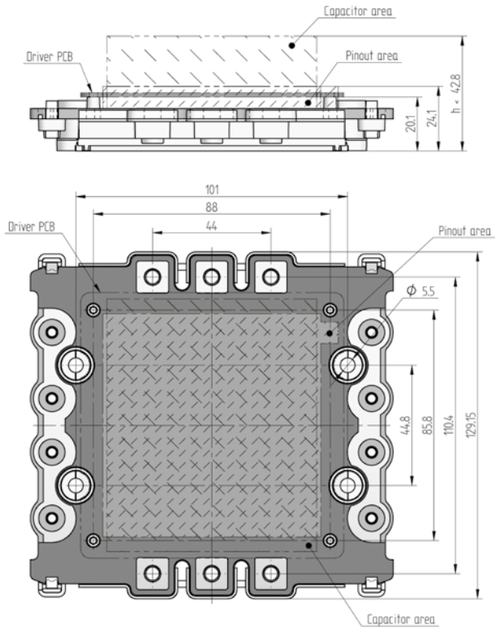

* Depending on the power

VINco X8

Housing dimensions:
Height: 14.75 – 17.15 mm*
Lenght: 236 mm
Width: 135 mm

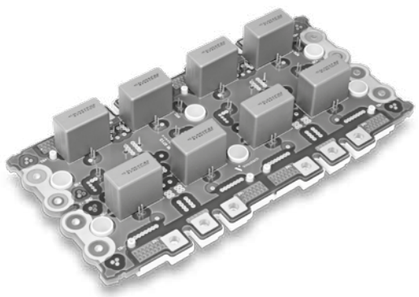

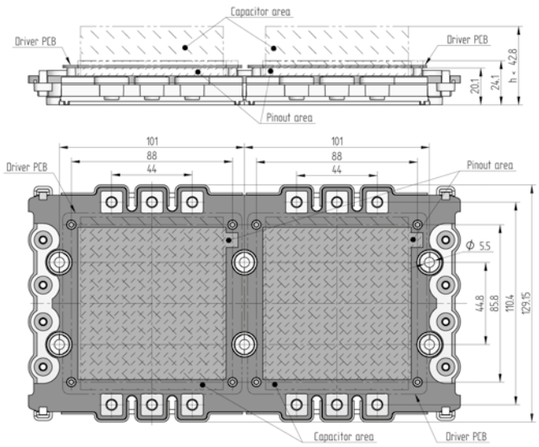

* Depending on the power

VINco X12

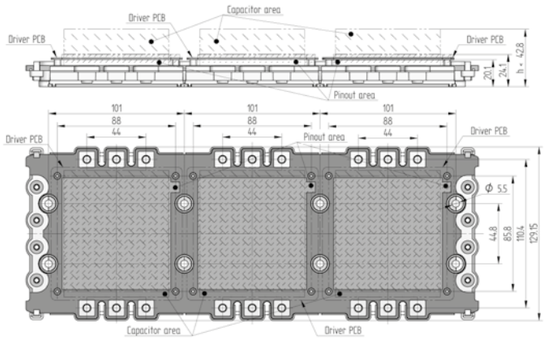

Housing dimensions:
Height: 14.75 – 17.15 mm*
Lenght: 317 mm
Width: 135 mm

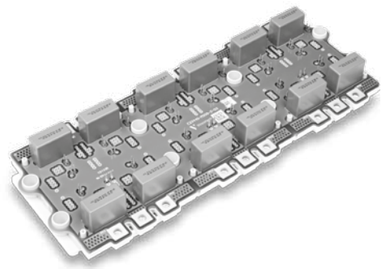

* Depending on the power

MiniSKiiP® 0

Housing dimensions:
Height: 16 mm
Lenght: 34 mm
Width: 31 mm

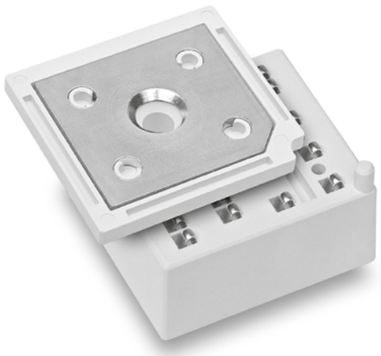

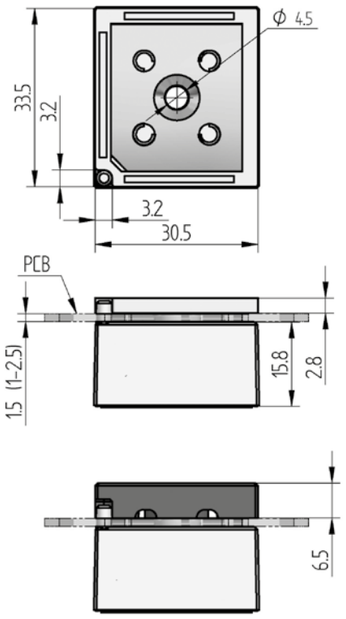

MiniSKiiP® 1

Housing dimensions:
Height: 16 mm
Lenght: 42 mm
Width: 40 mm

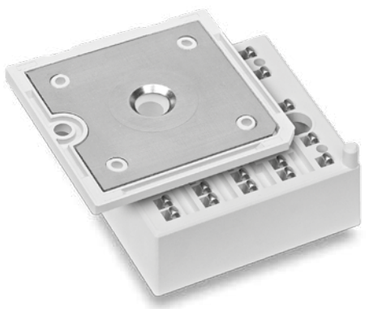

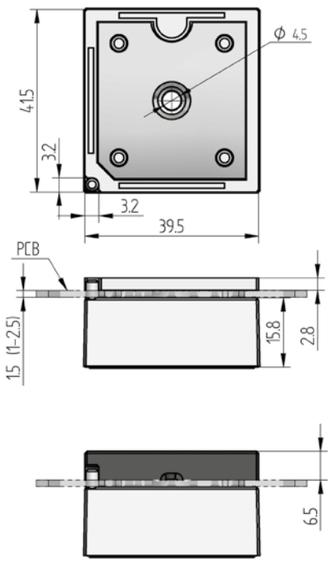

MiniSKiiP® 2

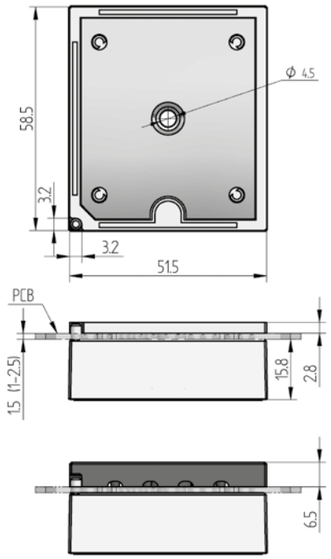

Housing dimensions:
Height: 16 mm
Lenght: 59 mm
Width: 52 mm

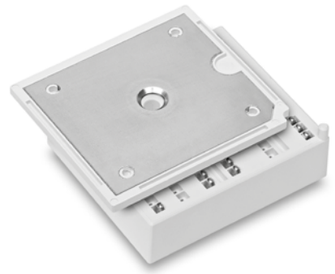

MiniSKiiP® 3

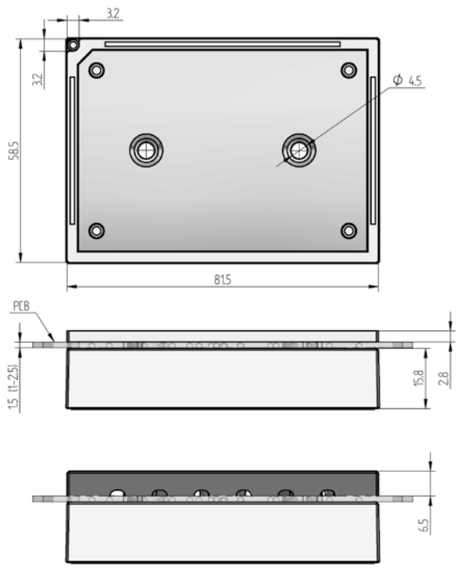

Housing dimensions:
Height: 16 mm
Lenght: 82 mm
Width: 59 mm

VINCOTECH **WORLDWIDE**

- ▲ HEADQUARTERS
- ■ DESIGN CENTER
- ◆ SALES OFFICES
- ● MANUFACTURING

/ LOCATIONS

Vincotech is an internationally expanding company within the Mitsubishi Electric Corporation. The firm is headquartered in Germany and operates a production site in Hungary.

Description
Naming System

YOUR CONTACT

ABBREVIATIONS

AC	Alternating Current
AlN	Aluminium Nitride
Al_2O_3	Aluminium Oxide
AMNPC	Advanced MNPC
BRC	Brake Chopper
CIB	Converter Inverter Break
DC	Direct Current
DCB	Direct Copper Bonding
EMC	Electromagnetic Compatibility
FET	Field-Effect Transistor
FWD	Free Wheeling Diode
IGBT	Insulated Gate Bipolar Transistor
IPM	Intelligent Power Module
JFET	Junction Field-Effect Transistor
LVRT	Low Voltage Right Through
MNPC	Mixed voltage NPC
MOSFET	Metal-Oxide Semiconductor Field-Effect Transistor
MPP	Maximum Power Point
NPC	Neutral Point Clamp
NTC	Negative Temperature Coefficient
PCM	Phase-change Material
PFC	Power Factor Correction
PIM	Power Integrated Module
PTC	Positive Temperature Coefficient
REACH	Registration, Evaluation, Athorization & Restriction of Chemicals (EU 1907/2006)
RoHS	Restriction of certain Hazardous Substances (EU 2011/65)
$R_{DS(on)}$	On resistance
R_{th}	Thermal Resistance
SCR	Silicon Controlled Rectifier (thyristor)
Si	Silicon
SiC	Silicon Carbide
SMPS	Switching Mode Power Supplies
TIM	Thermal Interface Material
Tj	Junction Temperature
UPS	Uninterruptable Power Supply
ZVS	Zero Voltage Switching

VERSION 1

This ordering code is identical with the product name shown here. It remains valid for all products released before mid-2009 and subsequent releases within product families established before 2009.

Leading Number
V23990: Power modules
V23109: Relays
S30814: Hybrids

Product Identification
First two digits: product family identifier
Last digit: module identifier
Modules are listed from lowest to highest power (e.g. 600 V / 4 A – 1200 V / 15 A)

Part Number
Ending

V23990-P868-F49Y-/3/-PM

Product Classification
P: *flow* power modules
K: MiniSKiiP® power modules
S: Relays
Q: Hybrids

Option Code
Different housings
Optional DCB material
Optional parts (e.g. brake)
Y as last letter:
Press-fit option

Option Code 2 (optional)
Thermal Interface Material:
MiniSKiiP® options

VERSION 2

Version 2 introduces a new name and ordering code for products released after mid-2009.
/ The new product name describes the module's characteristics.
/ The new ordering code extends the product's name. It is listed in the product data sheet.

* Examples

Technology Group
For UL notification

Voltage
06: 600 V
07: 650 V
09: 900 V
12: 1200 V
17: 1700 V

Pinout
Modules with same topology, same housing, and same pinout have same character

Current/$R_{DS(on)}$
045 (IGBT): 45 A
045 (MOS): 45 mΩ

Options
Alternative parts
Optional substrate material

Internal Identifier

10-PZ06NRA041FS02-P965F68Y-/3/

Housing Solder Pins
FZ: *flow* 0 12 mm
F0: *flow* 0 17 mm
F1: *flow* 1 17 mm
FY: *flow* 1 12 mm
FB: *flow* 1B
F2: *flow* 2 17 mm
FT: *flow* 2 12 mm
R1: *flow*90 1
S2: *flow*SCREW 2
S3: *flow*SCREW 3
0B: *flow* 0 B
R0: *flow*90 0
PZ: *flow* 0 w/o clip
TY: *flow* 1

Press-fit Pins
PZ: *flow* 0 12 mm
P0: *flow* 0 17 mm
P1: *flow* 1 17 mm
PY: *flow* 1 12 mm
PB: *flow* 1B
P2: *flow* 2 17 mm
PT: *flow* 2 12 mm
TY: *flow* 1 12 mm 2-clip

Screw Terminals
T2: *flow*SCREW 2
T3: *flow*SCREW 3
W2: *flow*SCREW 4w
W4: 2x*flow*SCREW 4w
W6: 3x*flow*SCREW 4w

MiniSKiiP®
M0: MiniSKiiP® 0
M1: MiniSKiiP® 1
M2: MiniSKiiP® 2
M3: MiniSKiiP® 3

Topology*
2P: Half-Bridge
2T: Rectifier + PFC
2U: Rectifier + P-Switch PFC
BI: Boost + inverter
IP: IPM w/o brake, with PFC
NB: Symmetric boost
NI: NPC
NP: NPC parallel switch
NR: NPC reactive power
NM: MNPC
RI: Rectifier + inverter
PM: PIM (CIB)
PN: PIM w/o brake (CI)
PQ: PIM (CIB) with 1~ rectifier
PR: PIM w/o brake (CI) with 1~rectifier
PP: PIM w/o brake with PFC

Chip Technology*
FB: IGBT2 High-Speed
FH: CoolMOS™ CP
FI: CoolMOS™ CFD
FP: Parallel Switch
FS: CoolMOS™ C6
FU: Fieldstop IGBT
MC: MOSFET + SiC
MF: MOSFET + Fast Diode
SA: IGBT3 Standard
SB: IGBT3 Low Loss
SC: IGBT4 Low Power
SG: IGBT3 High-Speed
SH: IGBT4 High-Speed
SM: IGBT H5
SL: IGBT F5

Option Code (optional)
Thermal Interface Material
MiniSKiiP® options

Vincotech

Vincotech GmbH
Biberger Strasse 93 / 82008 Unterhaching / Germany
T +49 89 878 067-0 / F +49 89 878 067-300

www.vincotech.com